LEVEL II

12

AD A102680

AFGL-TR-81-0128

NEW TECHNIQUES AND DEVICES FOR MEASURING STRATOSPHERIC WINDS AND TURBULENCE

George P. Murphy

TRI-CON ASSOCIATES, INC.
765 Concord Avenue
Cambridge, Massachusetts 02138

DTIC
ELECTE
AUG 11 1981
C

Date of Report: May 1, 1981

FINAL REPORT: Period Covered June 1978
To December 1980

Approved for Public Release, Distribution Unlimited

DTIC FILE COPY

Air Force Geophysics Laboratories
Air Force Systems Command
United States Air Force
Hanscom AFB, Massachusetts 01731

THIS DOCUMENT IS BEST QUALITY PRACTICABLE.
THE COPY FURNISHED TO DDC CONTAINED A
SIGNIFICANT NUMBER OF PAGES WHICH DO NOT
REPRODUCE LEGIBLY.

81 8 10 034

Qualified requestors may obtain additional copies from the Defense Documentation Center. All others should apply to the National Technical Information Service.

DISCLAIMER NOTICE

THIS DOCUMENT IS BEST QUALITY PRACTICABLE. THE COPY FURNISHED TO DTIC CONTAINED A SIGNIFICANT NUMBER OF PAGES WHICH DO NOT REPRODUCE LEGIBLY.

UNCLASSIFIED

SECURITY CLASSIFICATION OF THIS PAGE (When Data Entered)

(19) REPORT DOCUMENTATION PAGE

READ INSTRUCTIONS BEFORE COMPLETING FORM

(18) 1. REPORT NUMBER: AFGL-TR-81-0128

2. GOVT ACCESSION NO.: AD-A102680

3. RECIPIENT'S CATALOG NUMBER: (9)

(6) 4. TITLE (and Subtitle): NEW TECHNIQUES AND DEVICES FOR MEASURING STRATOSPHERIC WINDS AND TURBULENCE.

5. TYPE OF REPORT & PERIOD COVERED: Final Report, Jun[redacted]78 - Dec[redacted]80

6. PERFORMING ORG. REPORT NUMBER: (14) C-170

(10) 7. AUTHOR(s): George P. Murphy

(15) 8. CONTRACT OR GRANT NUMBER(s): F19628-78-C-0194

9. PERFORMING ORGANIZATION NAME AND ADDRESS:
TRI-CON ASSOCIATES, INC.
765 Concord Avenue
Cambridge, MA 02138

10. PROGRAM ELEMENT, PROJECT, TASK AREA & WORK UNIT NUMBERS:
62101F
(16) 668705AP
(17) 05

11. CONTROLLING OFFICE NAME AND ADDRESS:
AIR FORCE GEOPHYSICS LABORATORIES
HANSCOM AIR FORCE BASE, MA 01731
CONTRACT MONITOR: J. H. Brown/LKD

(11) 12. REPORT DATE: 1 May [redacted]981 (12) 73

13. NUMBER OF PAGES: 75

14. MONITORING AGENCY NAME & ADDRESS (if different from Controlling Office):

15. SECURITY CLASS. (of this report): UNCLASSIFIED

15a. DECLASSIFICATION/DOWNGRADING SCHEDULE:

16. DISTRIBUTION STATEMENT (of this Report)

Approved For Public Release, Distribution Unlimited

17. DISTRIBUTION STATEMENT (of the abstract entered in Block 20, if different from Report)

18. SUPPLEMENTARY NOTES

19. KEY WORDS (Continue on reverse side if necessary and identify by block number)

Corona Anemometer
Time of Flight Anemometer
Thermosonde
Stratospheric Turbulence
Stratospheric Winds

20. ABSTRACT (Continue on reverse side if necessary and identify by block number)

New techniques and devices for Measuring Stratospheric Winds and Turbulence.

DD FORM 1 JAN 73 1473 EDITION OF 1 NOV 65 IS OBSOLETE

UNCLASSIFIED 390416

SECURITY CLASSIFICATION OF THIS PAGE (When Data Entered)

TABLE OF CONTENTS

Paragraph		Page
1.	INTRODUCTION AND OVERVIEW	1
	1.1 Contract Specifications	1
2.	CORONA ANEMOMETER	1
	2.1 Description of Electronics	3
	2.2 Review and Recommendations	7
3.	TIME OF FLIGHT ANEMOMETER	11
	3.1 Description of Operation	11
4.	TWO DIMENSIONAL ANEMOMETER	14
	4.1 Principal of Operation	14
	4.2 Initial Tests and Results	14
5.	THERMOSONDE	16
	5.1 Thermosonde Circuit Description	17
6.	LAUNCH SUPPORT	18
	6.1 First Launch	19
	6.2 Second Launch	20
	6.3 Florida Launch	21
7.	LABORATORY SUPPORT	21
	7.1 Corona Anemometer	21
	7.2 TOF Electrodes	22
	7.3 Convective Heat Transfer Coefficient	22

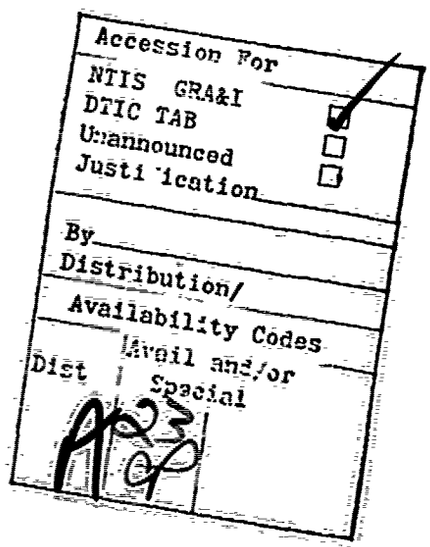

LIST OF FIGURES

	Page
FIGURE 1 Corona Anemometer	25
FIGURE 2 Beam Displacement	26
FIGURE 3 Block Diagram Corona Anemometer	27
FIGURE 4 Ion Current	28
FIGURE 5 Pre-Amplifier Corona Anemometer	29
FIGURE 6 Post-Amplifier Corona Anemometer	30
FIGURE 7 Corona Current	31
FIGURE 8 Digital Design	32
FIGURE 9A Time of Flight Anemometer	33
FIGURE 9B Time of Flight Anemometer	34
FIGURE 10A Pulse vs Count Rate	35
FIGURE 10B TOF Pulse vs Pressure	36

LIST OF FIGURES

	Page
FIGURE 11 Log Amplifier TOF Anemometer	37
FIGURE 12 Pulse Shape	38
FIGURE 13 Thermosonde	39
FIGURE 14 Experimental Package	40
FIGURE 15 Gondola	41
FIGURE 16 Post Launch	42
FIGURE 17 Damaged Payload	43
FIGURE 18 Rebuilt Structure and Outriggers	44
FIGURE 19 Convective Heat Transfer Test Circuit	45
FIGURE 20 Two Dimensional TOF	46
FIGURE 5 (ADDENDUM A) Pre-Amp Transfer Functions	68

INTRODUCTION OVERVIEW AND CONTRACT SPECIFICATIONS

1. INTRODUCTION AND OVERVIEW

This report covers the work performed on Contract No. F19628-78-C-0194 for the Air Force Geophysics Laboratory, Hanscom Air Force Base, Bedford, MA. The time period covered is from June 1978 to December 1980.

The instruments that were developed will be used to study stratospheric turbulence, which in turn, will help the scientist to understand the transport properties of aerosols and other pollutants in the upper atmosphere.

1.1 CONTRACT SPECIFICATIONS

(a) To redesign modify and refurbish an existing AFGL Corona Anemometer and to provide field support for balloon launches at various sites within the USA.

(b) To design and develop new techniques and devices for measuring stratospheric winds and turbulence.

(c) To test and calibrate a time of flight anemometer using AFGL laboratory facilities.

2. CORONA ANEMOMETER

The primary instrument serviced under this contract is a Corona Anemometer, an instrument developed at AFGL to measure turbulence in the stratosphere.

An excellent description of the development and operation of the Corona Anemometer is available in a final report published by the Air Force Systems Command and referenced as AFGL-TR-78-0070.

To the reader who is not familiar with the Corona Anemometer, a brief description of the operation is as follows:

High voltage breakdown in a point to plane system is used to generate a corona current of a few micro-amps. Figure 1 page 25.

The plane in this instrument is a circular disc with a hole in the center to allow for ion extraction. The ions are then attracted to a target plate which is used to sense the beam displacement as a function of wind velocity.

The target plate is divided into four quadrants which are isolated from each other and have separate amplifiers to measure their portion of the ion beam.

Wind blowing perpendicular to the ion beam will cause a displacement similar to that shown in the illustration of Figure 2 on page 26.

By comparing in-flight results with a laboratory calibration, one can obtain pertinent data on wind profiles as a function of altitude and time.

2.1 DESCRIPTION OF ELECTRONICS

In Figure 3 on page 27, one can see a block diagram of the Corona Anemometer Experiment. An explanation of each of the subsystems will follow.

2.1.1 PRE-AMPLIFIERS

The pre-amplifiers are mounted in separate aluminum boxes to minimize noise and crosstalk effects on the low amplitude signals.

A Teledyne Philbrick 1425-02 FET integrated amplifier was chosen as the first stage of the preamplifier. The following specifications are pertinent:

$$Vo_s < 1 \text{ mv adjustable to zero}$$

$$I_{Bias} < 5 \text{ pa}$$

$$Vos/_{C^o} < 10 \ \mu v/_{C^o}$$

The low bias current is the primary reason for this selection. A table of ion current in each quadrant as a function of pressure appears in Figure 4 on page 28.

The operational amplifier is used in a voltage follower mode with an RC feedback network to set the upper frequency cutoff of approximately 1800 H_z.

If a redesign is done on the experiment, a different choice of operational amplifier could eliminate a number of components such as trimpots, resistors and capacitors.

It is also suggested to mount the pre-amps in the target housing to eliminate the need of long triax cables. These cables proved to be quite cumbersome. Using state of the art integrated circuits, a pre-amp could be mounted on a surface area no larger than 10 cm^2.

2.1.2 POST AMPLIFIERS

The post-amplifiers are used to generate the X and Y components of the detected wind. The X component being $\{(A+B)-(C+D)\}$ and the Y component $\{(A+C)-(B+D)\}$.

The ua 725 is used for low bias offset and low drift with temperature while the ua 741 is used for non critical general purpose amplification.

The output of the post-amplifier is sent to a divide block which conditions the signal by dividing $K\{(A+B)-(C+D)\}$ by the product of pressure and total target current. The output of the divide block is sent back to the post-amplifier board and is used to generate the four telemetred signals: DC low, DC high, AC low and AC high. The DC high and AC high signals are a factor of ten higher than their respective low signals.

2.1.3 ZERO CORRECTION

The zero correction circuit is used to compensate for drift or erroneous signals which may be due to changes in the ion beam characteristics resulting from needle point wear.

It will also detect and compensate for drift in the pre-amplifier and post-amplifier circuits.

On a command to "check zero", a motor driven cylinder moves to cover the opening between the sensor elements. This cover eliminates any air flow and results in a no wind condition. A signal is then sent to a one shot which resets the correction counter to zero and enables a square wave oscillator.

The oscillator and the counter produce a voltage staircase which is fed back to the post-amplifiers to correct for non zero conditions. When the zero level is reached, a comparator inhibits the oscillator, and the proper voltage level is stored in a counter. The starting point of the correction staircase is offset to eliminate the need for an up/down counter. The correction is made for both the X and Y directions. An indication of the correction voltage is also telemetred back to ground to serve as a diagnostic tool to determine the performance of the instrument.

2.1.4 CORONA CURRENT CONTROL

The corona current control loop is made up of a high voltage power supply, an isolation amplifier and a voltage regulator. The current leaving the needle point causes a voltage to appear across a series resistor which serves as an input to the isolation amplifier. The isolation amplifier is a potted hybrid module. This module uses a high voltage isolated chopper transformer to transfer the sensed signal from the high voltage power supply output to the ground reference level. This signal is then used as a control of the high voltage by way of the input regulator. A rather long time constant (greater than 10 seconds) is inserted in the loop because of

the inherent instability of corona discharges. The corona current is adjusted in the laboratory by moving the needle point relative to the corona plate. The design goal 2 microamps of current with 1700 volts from point to plane is with a pressure of 120 mm Hg. The voltage necessary to maintain the 2 μa will decrease as the experiment ascends into the stratosphere.

2.1.5 MULTIPLY AND DIVIDE BLOCKS

To normalize the data as a function of altitude the output of a pressure transducer is multiplied by a signal indicating the total target current. The multiplier is of the analog type and performs the function:

$$E_o = \frac{E_{pres}\, E_{tt}}{10}$$

The output of the multiplier is then divided into the conditioned outputs of the post amplifiers to yield

$$X = \frac{K\ \{(A+B)-(C+D)\}}{K_2\ (E_{pres} \times E_{tt})} \quad \text{and}$$

$$Y = \frac{K\ \{(A+C)-(B+D)\}}{K_2\ (E_{pres} \times E_{tt})}$$

2.1.6 HOUSEKEEPING

The remaining circuits are common to almost all experiments and include:

(a) Voltage Regulators

(b) Monitors

1. Temperature
2. Pressure
3. Voltage

(c) A commutator to time share the telemetry with slowly varying data.

2.2 REVIEW AND RECOMMENDATIONS

The AFGL Corona Anemometer as it exists today is rather large and heavy and consumes a considerable amount of power. This burden restricts its use to large scientific balloons. Its performance in the past has been satisfactory, but consideration should be given to a redesign in order to utilize the advances made in semiconductor technology. The redesign could follow an analog or digital format with the following recommendations.

2.2.1 ANALOG REDESIGN

2.2.1.2 POWER SUPPLY AND REGULATORS

The regulator circuits are designed around the integrated circuit Module 723. This is one of the first integrated circuit voltage regulators produced and requires numerous external components. It also requires additional pass transistors if the load currents exceed fifty milliamps.

Fixed voltage regulators are now available, with a variety of voltages in a single package at different power ratings, and they usually require only two external capacitors.

The present design also uses several plus and minus voltages and a number of batteries to supply the power.

An alternate approach is to use a single battery and a DC to DC converter to generate the various voltages.

2.2.1.2 ZERO CORRECTION

Due to the advances in digital to analog conversion techniques, the zero correction card may be greatly reduced. For example, converters are now available that have the counter, staircase generator, and buffer amplifier all in one dual-in-line package. The converters are available in 8, 10 and 12 bits with either binary or BCD codes.

2.2.1.3 PRE-AMPLIFIERS

The location of the pre-amps relative to the four quadrant collectors requires an interface of costly and cumbersome triaxial cables and connectors. An alternate approach is to mount the pre-amps in the same housing as the collector plates. The new location would simplify the cable and should improve the signal to noise ratio.

2.2.1.4 POST-AMPLIFIERS

The amplifier board utilizes 741 and 725 operational amplifiers to add, subtract, and amplify voltages from the pre-

amps, The 725 is not required in this application it could be replaced with an amplifier that is internally compensated thereby saving four components per amplifier.

Multiple amplifiers in the same package would also reduce the parts count without any loss in circuit performance. The trim potentiometers for the AC high, and AC low amplifiers are not necessary because of the inherent low offset voltage of these amplifiers. The overall reduction in parts would result in a board layout which is about one half the present size.

2.2.1.5 MULTIPLY AND DIVIDE

The multiply and divide card uses modules that were manufactured with discreet components in a hybrid package. These modules were usually 1 1/2 to 2 inches square and approximately 1/2 inch high.

With the advance of integrated circuit technology, these same functions can be performed in a small TO5 can and may be purchased for about one half the price.

2.2.2 DIGITAL DESIGN

A digital design of a Corona Anemometer Experiment would incorporate the use of a microprocessor to perform the data handling and calculations that are presently being done with hybrid circuits.

The system would have the following subsystems: See Figure 8 page 32.

2.2.2.1 PRE-AMPLIFIERS

The pre-amps increase the signal collected at each quadrant to a level compatible to the analog-to-digital converter.

2.2.2.2 MULTIPLEXER

The multiplexer sequentially samples the data from each pre-amp and directs it to the analog-to-digital converter.

2.2.2.3 ANALOG-TO-DIGITAL CONVERTER

Upon command from the microprocessor, the analog-to-digital converter converts the analog signal into 10 bits of digital data, and then stores the information until the processor has sampled each quadrant and the pressure tranducer.

Rapid technological advancements in A/D converters are due to the developments of microprocessors and their need to communicate with analog signals.

Medium speed low power CMOS converters, which use the successive approximation principle, make 10 bit conversions in less than 10 microseconds.

2.2.2.4 MICROPROCESSOR

The microprocessor is programmed to control the overall performance of the experiment and to calculate the various functions that are performed by analog circuits in the present design. These functions include addition, subtraction, multiplication and division.

When the shutter is closed, the microprocessor eliminates the zero correction circuit by sampling the output from each quadrant, and the results are stored in memory.

The processor then compares and calculates a correction factor. This factor is used until the next command for a zero check occurs..

The data out of the processor is in digital format and is telemetred back without the need of a PCM encoder. The word size is chosen so that the four most significant bits are an identification of the data to follow thus eliminating the need for syncronization.

3. TIME OF FLIGHT ANEMOMETER

3.1 DESCRIPTION OF OPERATION

The TOF Anemometer was developed and used by various investigators in the pursuit of stratospheric wind measurements. The instrument is also referred to as a "Gas Flow" or "Ion Tracer" Anemometer. The operation (refer to Figure9) is as follows:

A high voltage spark causes ions to be created in the vicinity of the spark electrode. In the presence of a wind, the ions are moved down the tube to a collector which is biased to select the positive ions. If the distance is known and the time of transit can be established, the velocity can be calculated as follows:

$$V = \frac{Sx\ (Clock)}{Acc.\ Counts}$$

Where: S = Distance between electrodes, clock = reference frequency, Acc. Counts = accumulated counts from start of pulse.

In the AFGL instrument, two TOF systems were mounted on the side of the balloon gondola. The vertical TOF contained two probes in the same tube to detect vertical or horizontal wind direction.

Sails were used to orientate the gondola in an attempt to point the horizontal TOF into the wind. The vertical TOF also gave an indication of the gondola'a vertical motion during ballast or helium release.

3.1.1 CIRCUIT DESCRIPTION

3.1.2 PULSE GENERATION

The high voltage pulse was generated by way of a step up transformer with a turns ratio of 100: 1. The voltage amplitude is adjusted to about 2000 volts, and the pulse width is set at approximately 100 microseconds. The pulse rate is one pulse per second, and the timing is derived from the PCM encoder clock.

3.1.3 PULSE DETECTION

A transistor logarithmic amplifier is used to amplify the pulse upon its arrival at the collector. A logarithmic amplifier is used because of the wide variation in pulse amplitude resulting from diffusion. Pulses carried by low wind velocities appeared at the detector with lower amplitudes and broader widths because of the longer diffusing time. A series of photographs taken of actual pulses appears in Figure 10A and 10B on pages 35 and 36.

A calibration curve for the log amplifiers is shown in Figure 11 page 37 with the useful range of currents approximately 5×10^{-11} to 10^{-7} amps.

3.1.4 PULSE TIMING

The pulse timing is accomplished by accumulating counts from a known clock source. The count begins when the high voltage pulse occurs, and it ends when the received pulse is detected.

To accurately measure the wind, the center of the pulse or the point at which the slope goes to zero is detected. The circuit designed to sense the zero slope included: a threshold detector to select all pulses over 0.25 volts; and a double differentiator followed by a zero crossing detector. The received pulse detector on the original experiments did not use the double differentiative method, therefore errors as large as 20 percent were common.

The accumulated counts were transferred into a 40 bit shift register and shifted out to telemetry at the proper time.

The 40 bits were utilized in the following manner:

First 8 bits-Identification Code 10111000
One bit-Detected Horizontal Pulse
Fifteen bits-Horizontal Data
One bit-Detected Vertical Pulse
Fourteen bits-Vertical Data
One bit-Up Or Down Vertical

4. TWO DIMENSIONAL TOF ANEMOMETER

4.1 PRINCIPLE OF OPERATION

The operation of the two dimensional TOF is similar to the previously mentioned instrument with the added capability of determining wind direction.

The ion cloud generation by means of a spark, and the timing and collection is basically the same as the one dimensional TOF. The collector, instead of being a piece of wire one-half inch long is a solid ring with a diameter of four inches covering 355 degrees.

Between the collecting ring and the ionizing electrode is another ring made up of segments. Each segment is electrically separated from the adjacent segment by a one meg-ohm resistor.

Each segment covers about five degrees of arc. The ends of the segmentated ring serves as the input to a pair of integrating amplifiers, and the charge measured by each is used to determine wind direction.

4.2 INITIAL TESTS AND RESULTS

The first attempt at developing a circular or ring type of TOF Anemometer was done by using a glass tube. This tube was formed into a circle and coated with a resistive material. Another ring was fabricated by using a thin strip of printed circuit material. The copper was etched into segments and then formed into a ring. The segments were then connected to each other by one meg-ohm resistors.

The above mentioned sensors were tested in a bell jar at AFGL, and the results were compared to the one dimensional TOF.

The received pulse (Figure 12) of the circular TOF has a lower amplitude and broader peak. There was also an unwanted pulse, which is not velocity related, that occurs just after the high voltage discharge.

The unwanted pulse was at first attributed to poor grounding techniques, but additional testing seemed to prove otherwise.

Changing the bias on the collector through the range of -10 volts to +10 volts, caused both pulses to disappear (at ~2 volts) and to reappear in the opposite polarity. These results are in agreement with previous experimenters, such as Lilienfeld et al, who claim the plasma cloud consists essentially of equal numbers of positive and negative ions.

Lilienfeld also had trouble with an unwanted spike, which occurred with the high voltage discharge, and he attributed this to very fast electrons.

The premature pulse in the circular TOF can be collected in either polarity. This indicates the presence of both positive and negative particles resulting from these very fast electrons.

These ions are generated by energetic electrons that produce a plasma in the vicinity of the collector, or by a secondary emission that strikes the collector.

The problem of an unwanted premature pulse could be solved by inhibiting the pulse detecting circuitry for about one millisecond after the high voltage discharge.

A new design with some different features is being fabricated and a sketch appears in Figure 20 page 46.

The new design will have a ground plane opposite the discharge electrode. This plate will reduce the effects of winds which are not in the plane of interest.

A dual ring will be used for ion collection. The first, a continuous ring which serves as the input to an amplifier, will be used to measure time. A second high impedance segmentated ring will be used to measure charge distribution. The dual ring will be looking perpendicular to the air stream and will not be in the path of any energetic particles which originate at the spark electrode.

A bias on the collectors will be used to sample the plasma cloud as it moves over the collector.

5. THERMOSONDE

The thermosonde system was developed for the US Government by GTE Sylvania. This system measures temperature fluctuations in the atmosphere while being carried aloft on small weather balloons.

The temperature sensing elements are two fine wire probes separated by about one meter. The sensor material is Tungsten. The diameter is about 0.1 mil. and the length is approximately 0.5 cm.

The region of interest in temperature flucuations is from .004°C to about .4°C.

The thermosonde will be integrated with a weather bureau type radiosonde, and the data returned to a ground station by way of the radiosonde transmitter.

The data from the thermosonde will be commutated with the data from three other sensors which measure pressure, temperature, and humidity.

5.1 THERMOSONDE CIRCUIT DESCRIPTION

A Block Diagram of the thermosonde circuit is shown in Figure 13. The probe resistance at 25°C is between 27 and 30 ohms. The change in probe resistance can be calculated by:

$$\Delta R = R_o \alpha \Delta T$$

$$= .00375 \text{ ohms.ohm}^{-1}.\text{DEG}^{-1} \text{ (measured)}$$

R_o = Probe Resistance at 0°C ≈25 Ω

ΔR = For .004°C

$$= (.00375)(.004)(25\Omega)$$

$$= .00038\Omega$$

ΔR For .4°C

$$= .038\ \Omega$$

The signal levels over the region of interest at the bridge output are about 0.1 microvolts to 10 microvolts.

The bridge is driven by a three kilohertz sine wave and AC coupled to a high gain amplifier. The output of the amplifier is a sine wave whose amplitude is linearly related to the amount the bridge is unbalanced.

The signal output is then fed into a synchronous demodulator which recovers the signal without recognizing the DC offset drift of the amplifier.

The demodulator output is then filtered by a low pass 4 pole butterworth circuit which has a 3 dB cutoff frequence of about 1 kilohertz.

The filtered output is applied to an RMS operator whose output is telemetered back to ground. The future use of the thermosonde experiment will be in measuring the atmospheric refractive-index structure coefficient.

$$C_N^2 = \left\{79 \frac{P(h)}{T^2(h)}\right\} \times 10^{-6} \quad ^2 \times C_T^2(h)$$

P = Press in (mb)

T = Temperature (K)

and C_T is derived from thermosonde data. A photograph of the proposed experimental package is shown in Figure 14.

6. LAUNCH SUPPORT

The first launch support field trip for this contract involved traveling to Watertown, South Dakota, for measurement of wind turbulence over the plains.
A photograph of the gondola prior to launch appears in Figure 15. The scientific package consisted of two corona anemometers, two time of flight anemometers, a thermosonde experiment pressure transducer and a telemetry rack.

The balloon used for launch had a volume of approximately 3×10^6 cubic feet and would take the payload up to about 90 thousand feet. Variations in altitude are adjusted by either releasing helium to descend or releasing a glass bead ballast to ascend.

After lift off, a reel down from the load bar allows the payload to float about 600 feet below the balloon and parachute, thereby, reducing the effects of the balloon on the turbulence sensor measurements. A sketch of the post launch configuration appears in Figure 16 page 42.

At the termination of flight (approximately 12 hours later) the balloon is separated from the rest of the payload, and a parachute controls the descending rate of the load bar and gondola.

Impact switches located in the base of the gondola are used to free the payload from the parachute upon touch-down.

6.1 FIRST LAUNCH

The first launch from Watertown, South Dakota, was only a partial success because of power failure in the Corona Anemometer Experiment.

Examination of the housekeeping data indicated a high rate of discharge in one of the flight batteries with subsequent failure after about three hours of operation.

The payload was kept aloft for another four hours because all other experiments were functioning properly, mainly the TOF Anemometer.

When the balloon landed, the impact switches failed to activate. This failure caused the parachute to drag the gondola through a cornfield, and as a result of this failure, severe damage was inflicted upon the payload.

After assessing the damage, a decision was made to refurbish the gondola, to resume experimentation and to attempt another launch. Aluminum stock was then flown in from Minneapolis, and the upper structure and outriggers were completely rebuilt, see Figure 18 page 44.

6.2 SECOND LAUNCH

During the second balloon flight, the Corona Anemometers functioned properly, but the TOF experiments did not.

In the process of refurbishing the gondola, the TOF experiment was moved from a topside position to a lower portside position thus changing the amount of time the package received sunlight. The internal temperature of the TOF package during the first flight remained at about $+50^{\circ}F$, but during the second flight it dropped to $-20^{\circ}F$, resulting in a degradation of performance.

Data obtained from the two South Dakota flights added substantially to the knowledge of stratospheric winds.

6.3 FLORIDA LAUNCH

In August 1979, a high altitude balloon launch was made from Eglin Air Force Base in Florida. The balloon crossed the Gulf of Mexico and parachute landed in Texas. The purpose of the flight was to compare wind profiles and turbulences over the Gulf with data obtained over the plains and mountains.

The overall flight can be considered a success, but some minor problems did occur.

One of the two Corona Anemometers has a stability problem in the high voltage control loop which may have been caused by ice formation in the corona producing region.

The other Corona Anemometer functioned properly throughout the flight so that loss of data was minimal.

7. LABORATORY SUPPORT

In addition to launch support and experiment calibration, a variety of tasks were performed by TRI-CON personnel.

7.1 CORONA ANEMOMETER

A selection of aperture plates with various hole diameters and thicknesses were designed and manufactured to study the effects of electrode geometry on corona stability. A variety of needle points were also fabricated from different materials with machined tips at 30°, 45° and 60°.

A needle position control system was built using a stepping motor and gear box to simulate the change in corona characteristics as the needle tip wears down. The system can advance or retract the corona needle in .03 mil increments relative to a zero position.

7.2 TOF ELECTRODES

The TOF high voltage pulse did not always cause a breakdown at the spark electrode, when tests were being conducted in the laboratory. Occasionally, if the electrode was removed and polished with a final rinse in alcohol, the performance was improved.

There was never any indication of a misfire during either balloon flight, but reliability problems in the laboratory caused some concern.

Platinum iridium spheres, .02 inch in diameter were obtained from Engelhard Industries in New Jersey. An attempt to burn a hole in the spheres with a laser so that a lead could be attached turned out to be a failure. Investigations into the use of a noble metal such as platinum to make the TOF high voltage electrode has not been completed as of the termination of this contract.

7.3 CONVECTIVE HEAT TRANSFER COEFFICIENT

A circuit was designed to measure the thermal dynamic characteristic of the Tungsten wire which will be used in the thermosonde probes.

A Schematic of the circuit used is shown in Figure 19 and the operation is as follows:

Amplifier A_1 is a voltage to current converter whose output current into the bridge circuit will be equal to the input voltage "Ein" divided by the selected resistor "Rs", within the limits of the power supply.

The bridge is made up of two precision wire wound resistors, a wire wound potentiometer and the probe under test.

The amount of unbalance in the bridge is amplified by A_2 which has a gain of

$$g = 100/1.2 = 83.3$$

The wire wound resistors used in the bridge are purchased to a .01% tolerance and have a temperature coefficient of 2 ppm/^oc.

All other circuit parameters are relatively insensitive to temperature compared to the temperature coefficient of the Tungsten wire which is 3750 ppm/^oc.

The test is conducted by applying two known voltage levels to the input of A_1 which produces two different current levels through the probe. For example, the two voltage levels of .5 volts and 5 volts would result in two currents of 1 ma and 10 ma.

The convective heat transfer coefficient can be calculated from the equation

$$h = \frac{I_2^{\,2} R_2 - I_1^{\,2} R_1}{J A_s \Delta T}$$

after ΔT has been established from measured parameters and the standard α of Tungsten.

$$\Delta R_1 = \frac{E_{o1}}{I_1}$$

$$\Delta R_2 = \frac{E_{o2}}{I_2}$$

$$\Delta R = \Delta R_2 - \Delta R_1$$

$$\Delta T = \frac{\Delta R}{(\alpha) R_p}$$

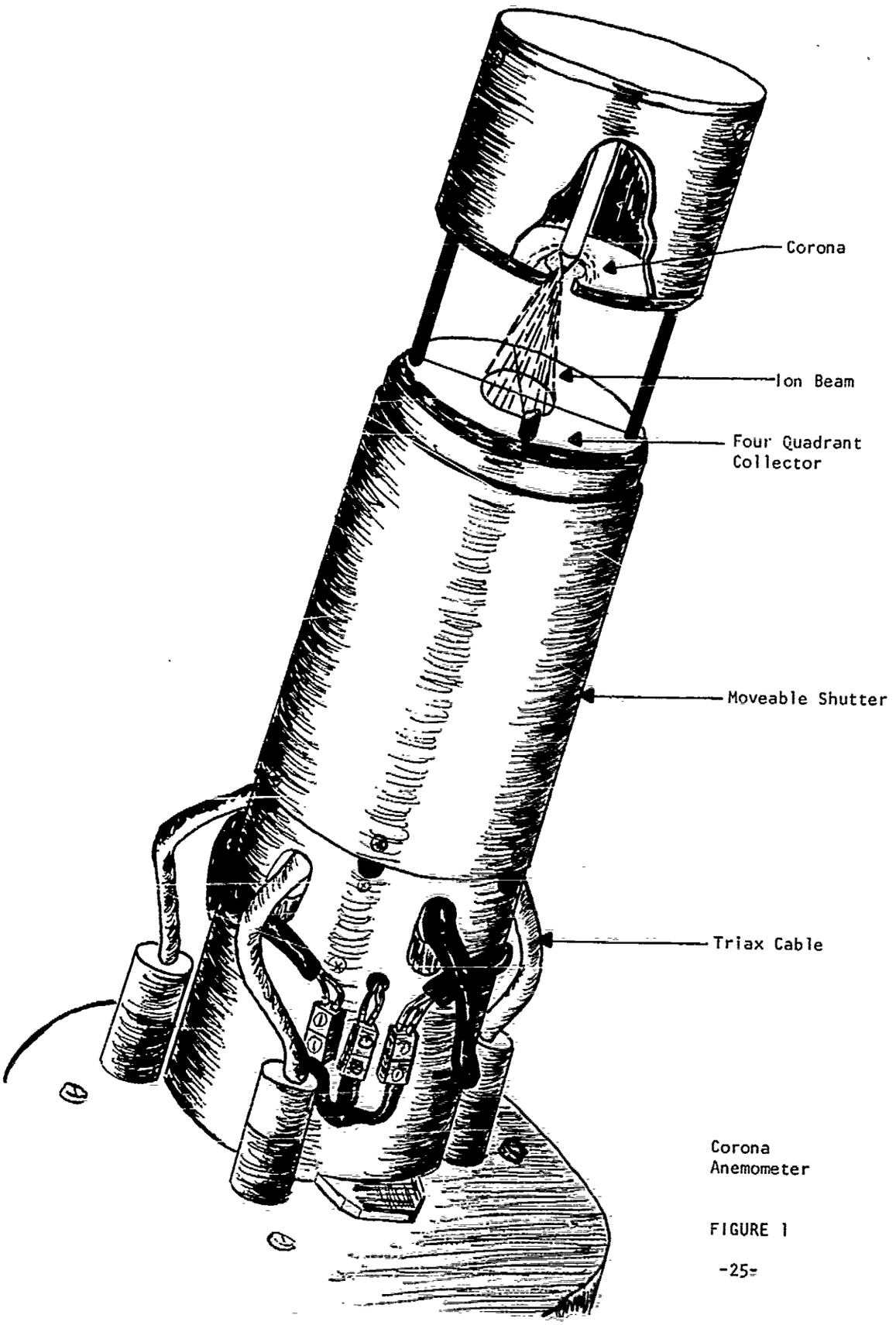

Corona
Anemometer

FIGURE 1

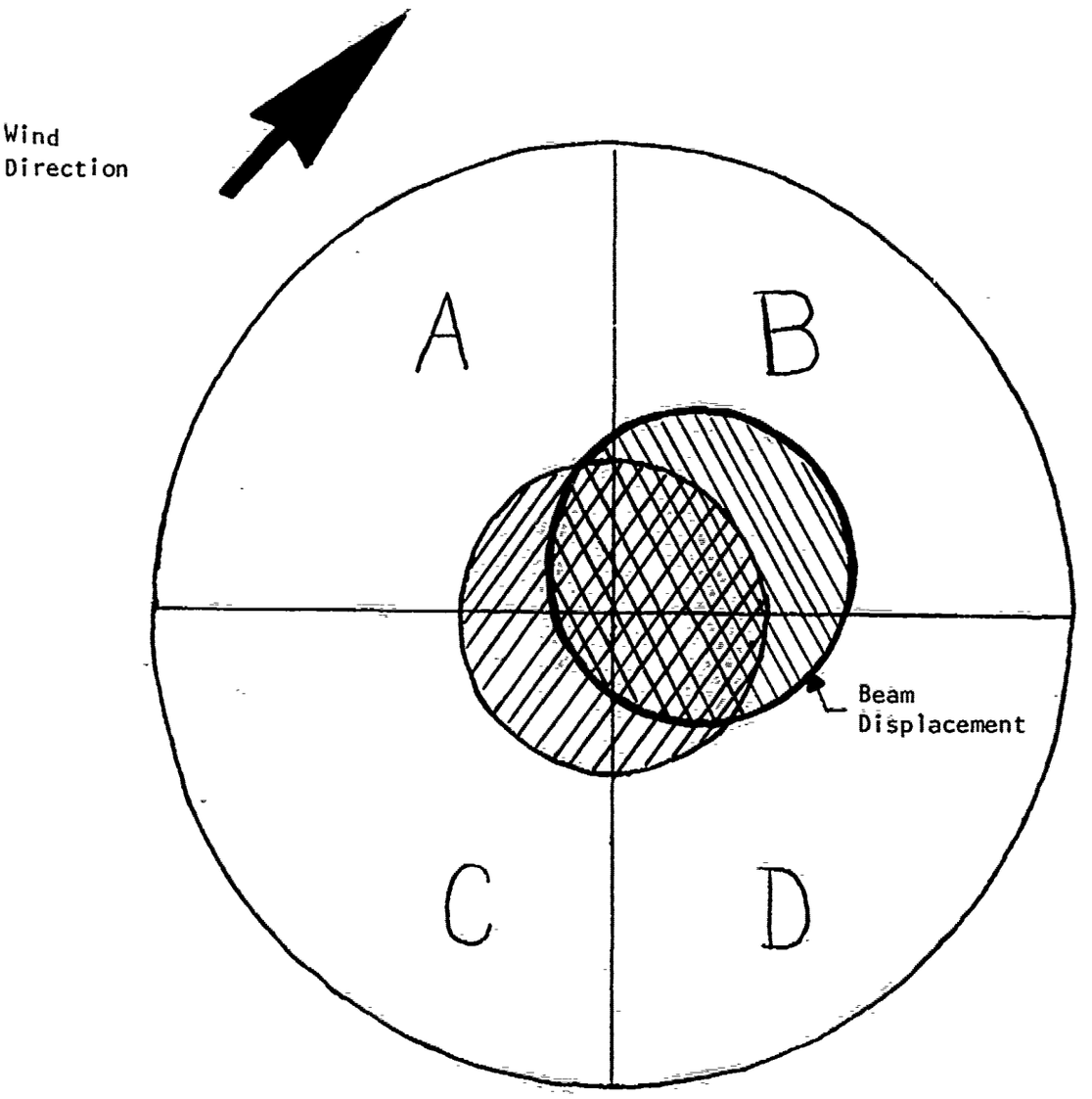

FIGURE 2

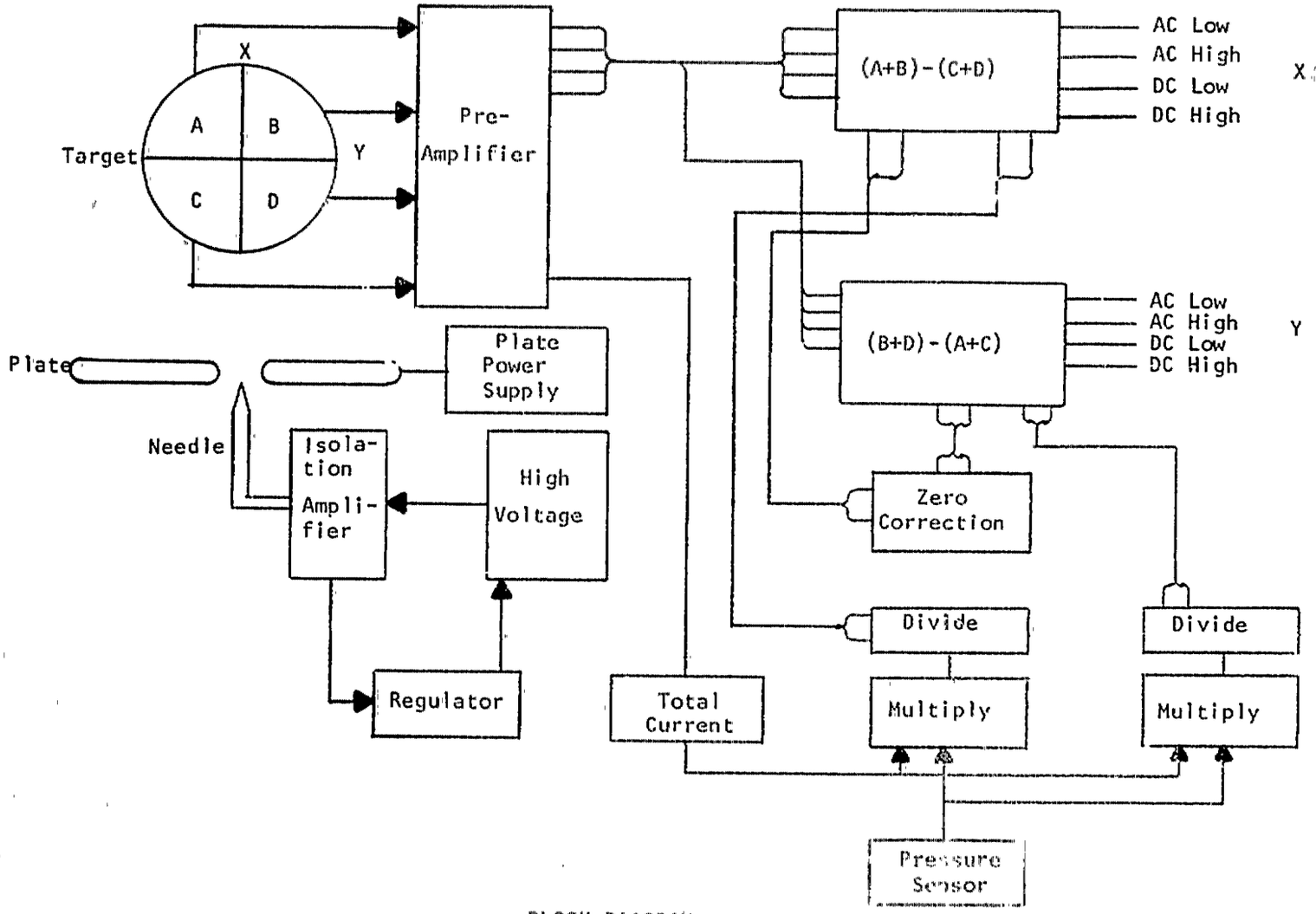

BLOCK DIAGRAM
CORONA ANEMOMETER

FIGURE 3

Ion current as a function of pressure and bias voltage between corona plate and collector. Corona current =

P = 20 mm Hg

Plate Bias	100 volts	345 volts
Quad		
A	21.8 nano amps	131 nano amps
B	2.2 " "	130 " "
C	2.2 " "	132 " "
D	21.8 " "	130 " "

P = 100 mm Hg

Plate Bias	100 volts	345 volts
Quad		
A	8 nano amps	38.8 nano amps
B	8 " "	39.2 " "
C	8 " "	38.6 " "
D	8 " "	38.8 " "

FIGURE 4

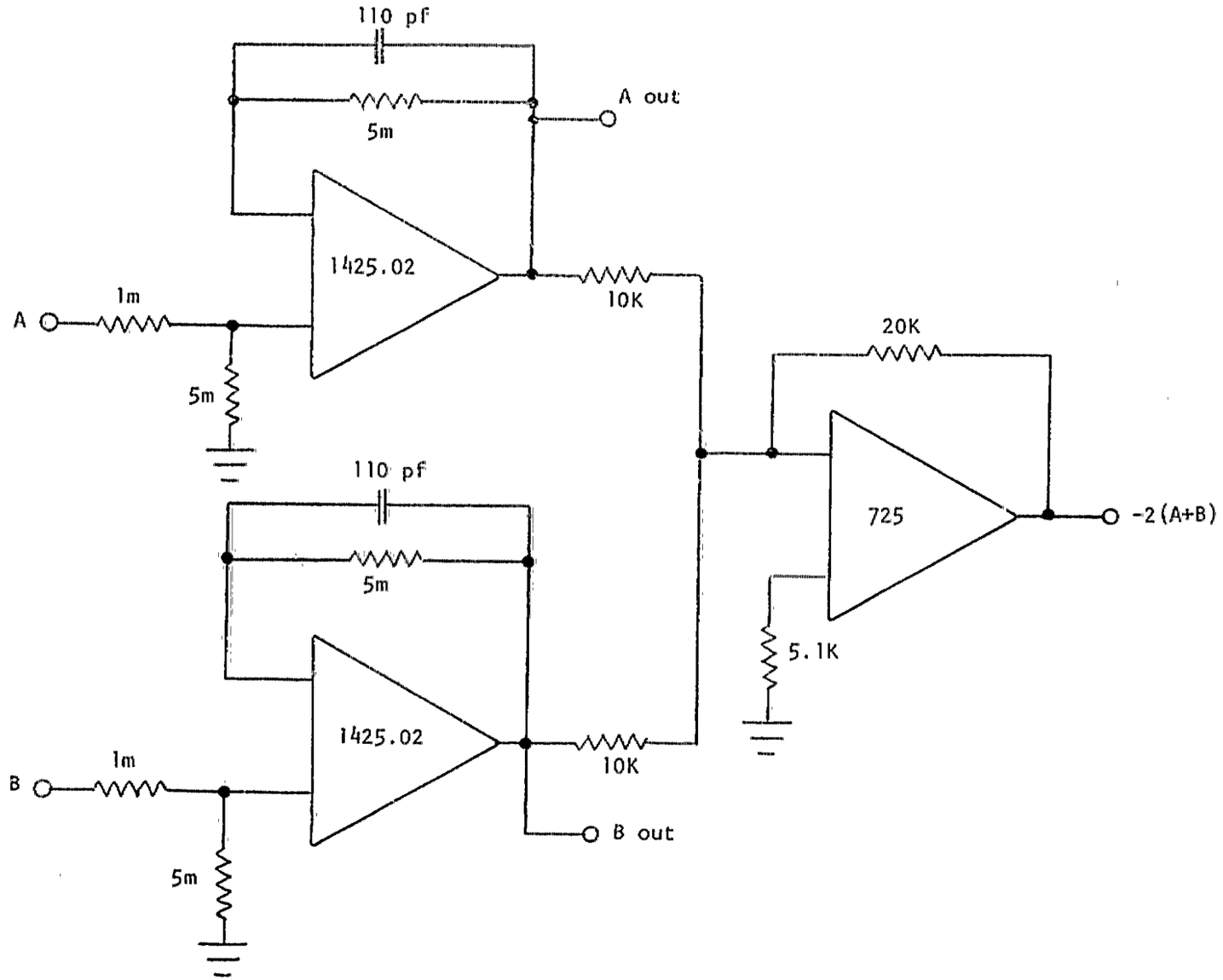

PRE-AMPLIFIER
CORONA ANEMOMETER
FIGURE 5

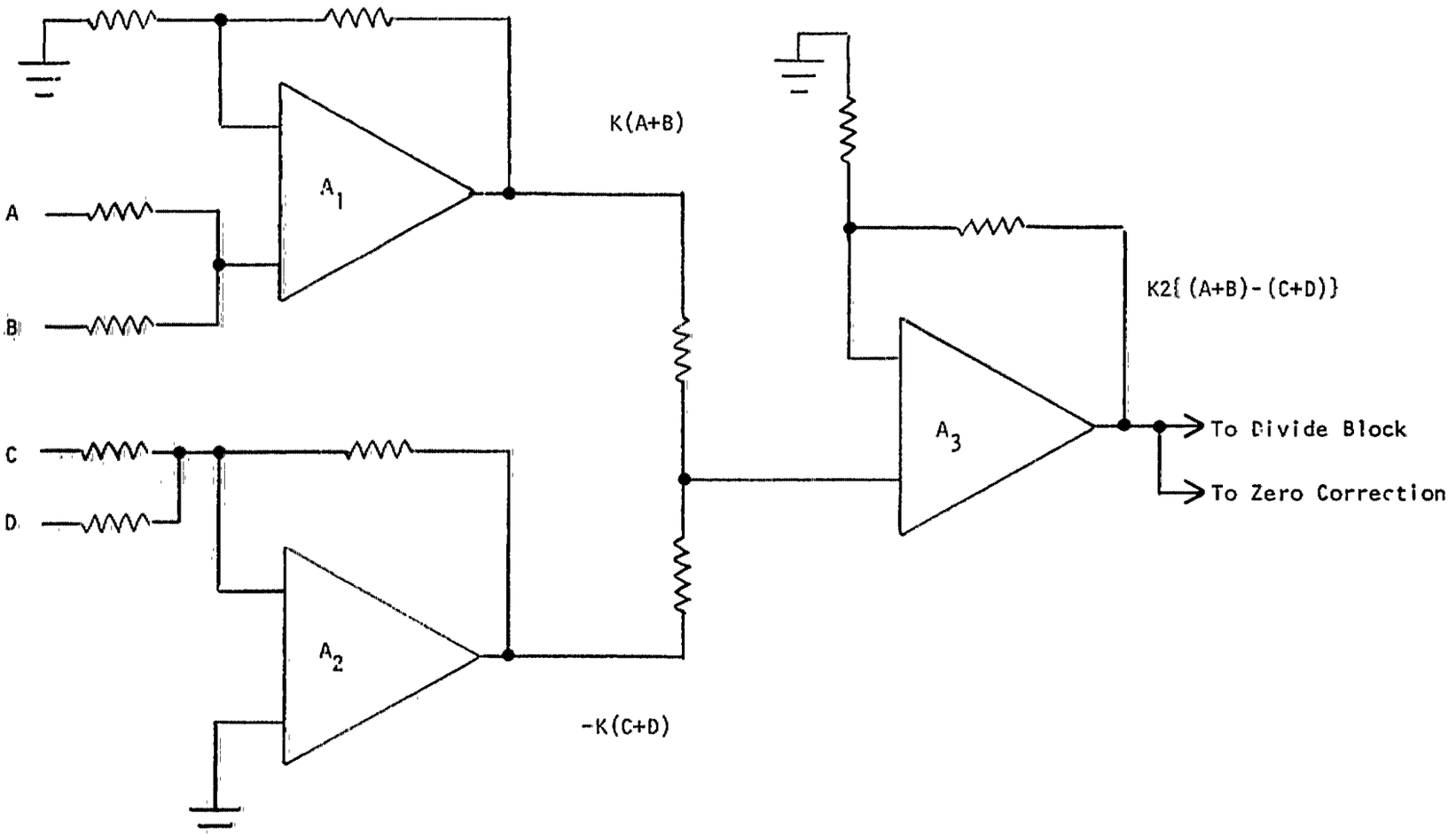

POST-AMPLIFIERS
BLOCK DIAGRAM
CORONA ANEMOMETER

FIGURE 6

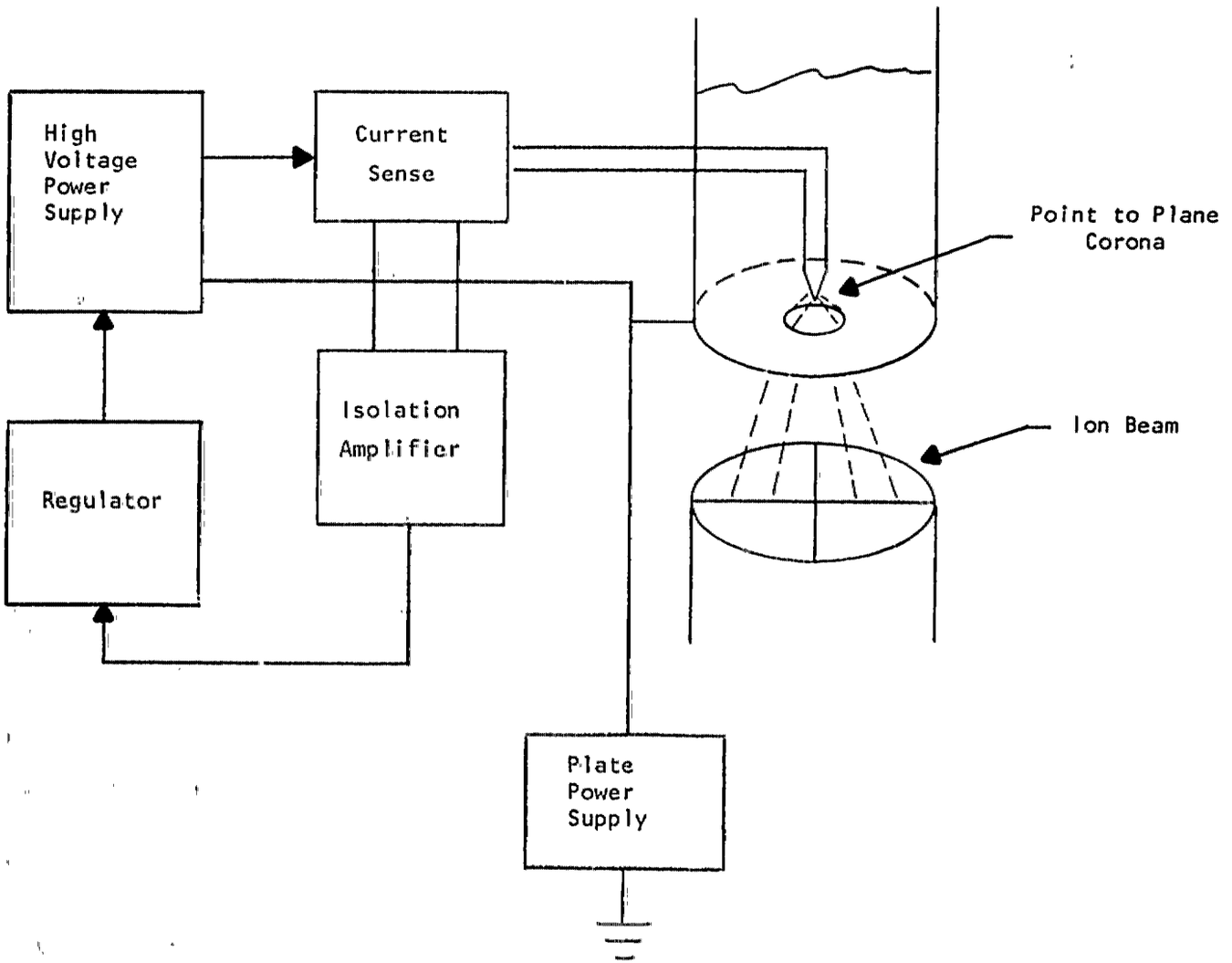

CORONA CURRENT
FIGURE 7

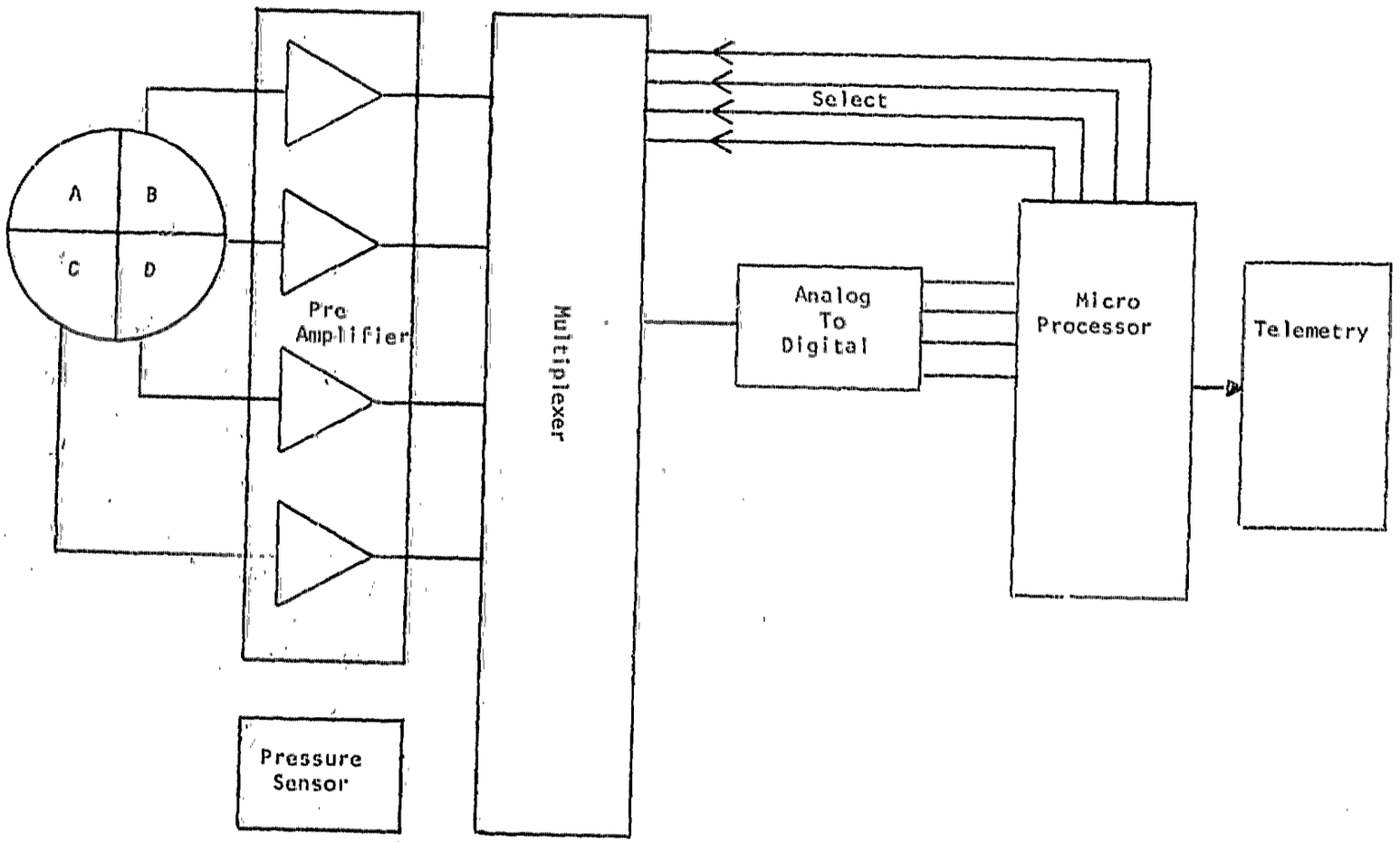

DIGITAL DESIGN
BLOCK DIAGRAM
FIGURE 8

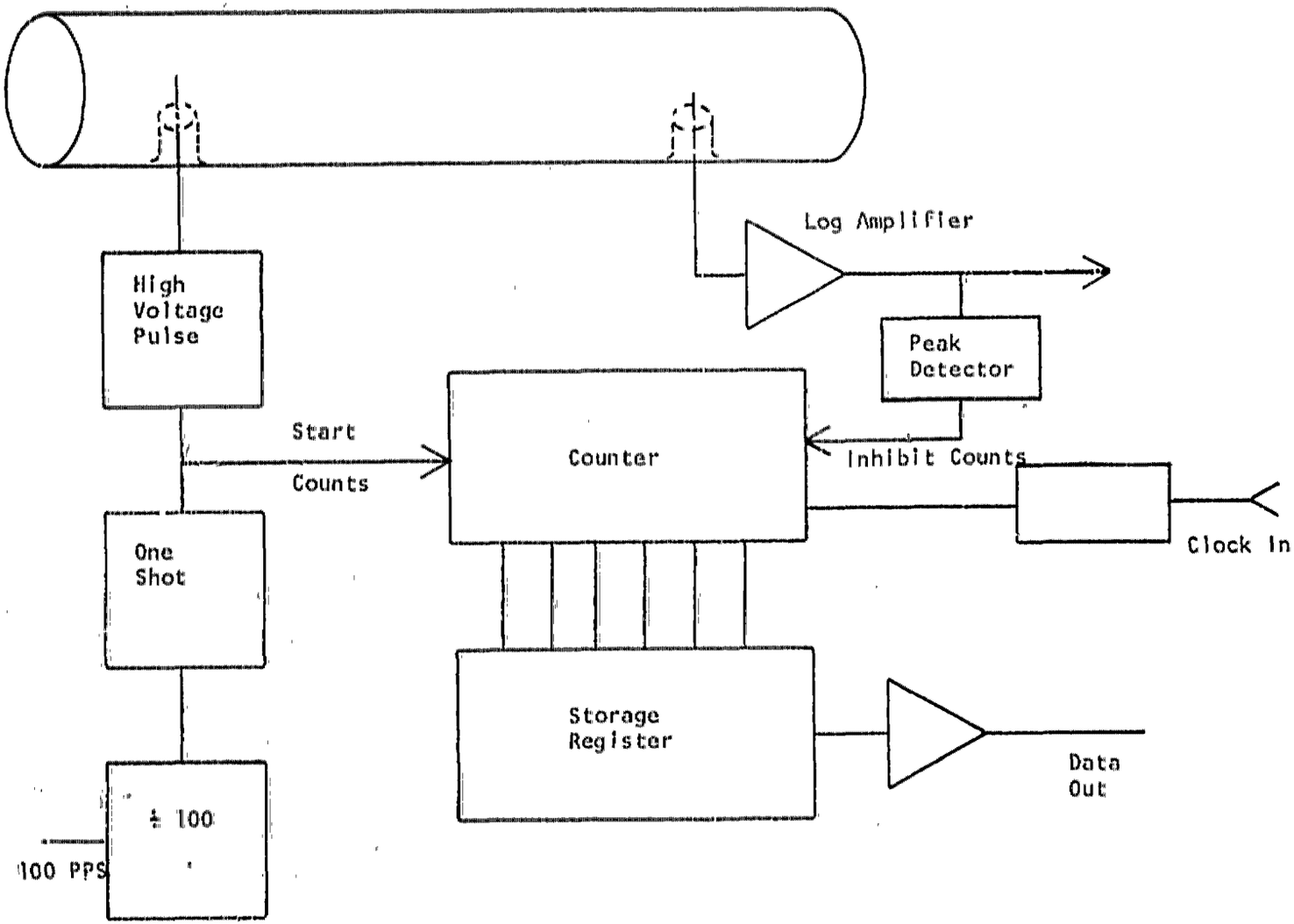

TIME OF FLIGHT
ANEMOMETER
BLOCK DIAGRAM

FIGURE 9A

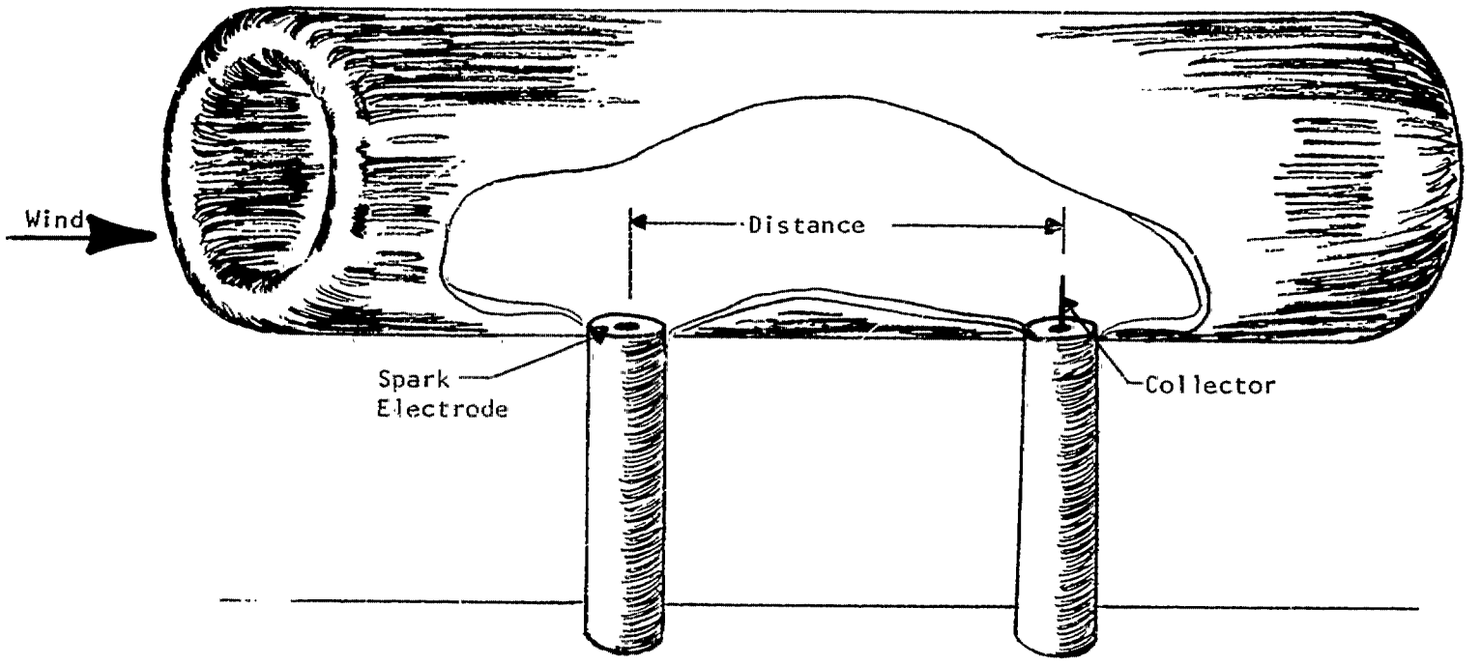

TIME OF FLIGHT ANEMOMETER

FIGURE 9B

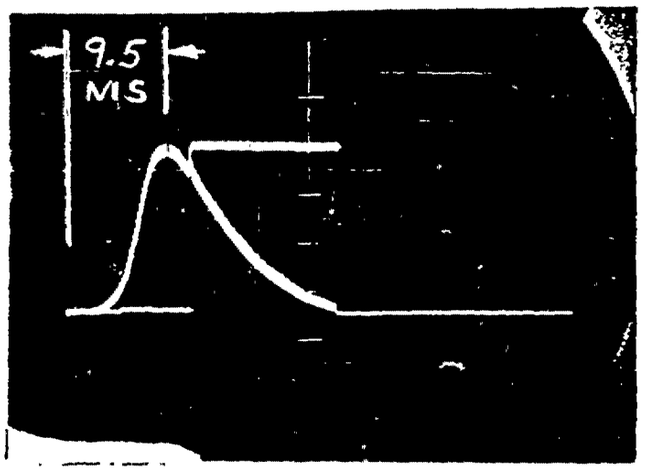

$I_{Peak} = 5X10^{-9}A$ 800 counts/sec.

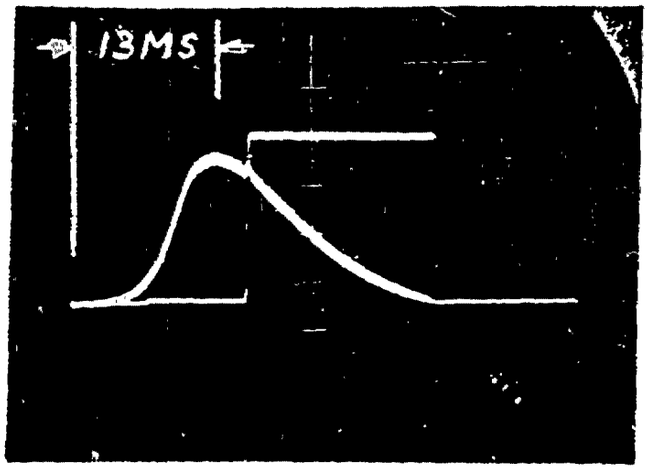

$I_{Peak} = 3X10^{-9}A$ 600 counts/sec.

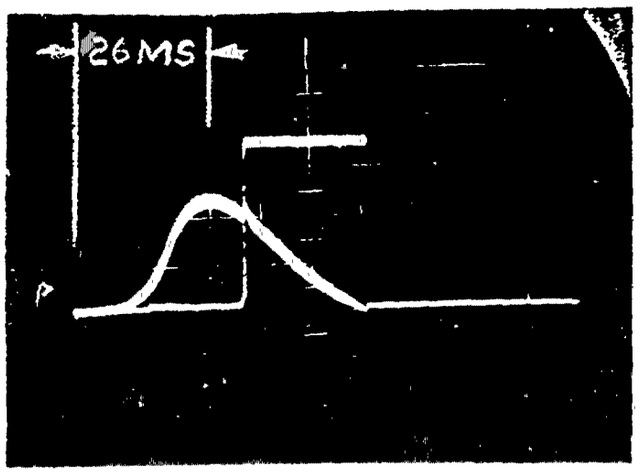

$I_{Peak} = 10^{-9}A$ 400 counts/sec.

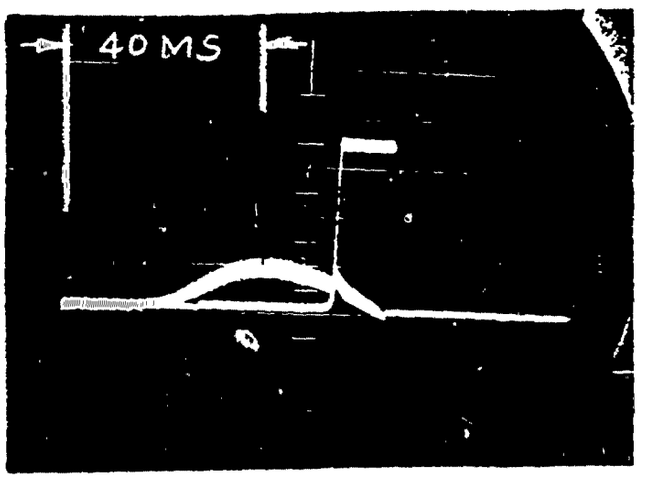

$I_{Peak} = 10^{-10}A$ 200 counts/sec.

PULSE vs COUNT RATE
PRESSURE = 20 *mm* Hg
FIGURE 10A

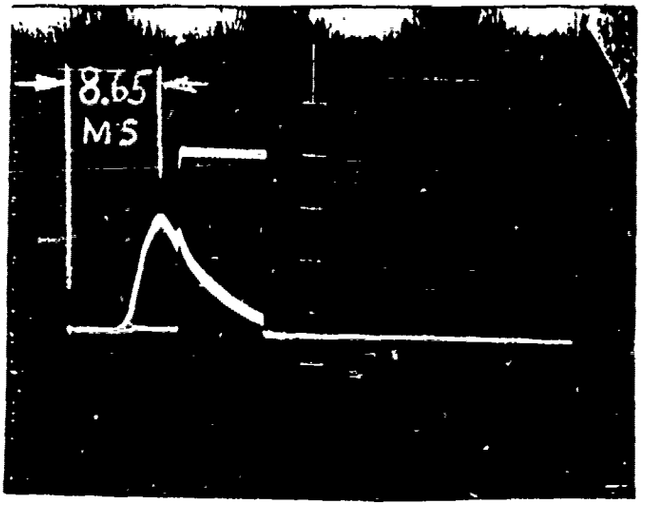

Pres - 60 mm Hg

$I_{Peak} = 7X10^{-10}A$

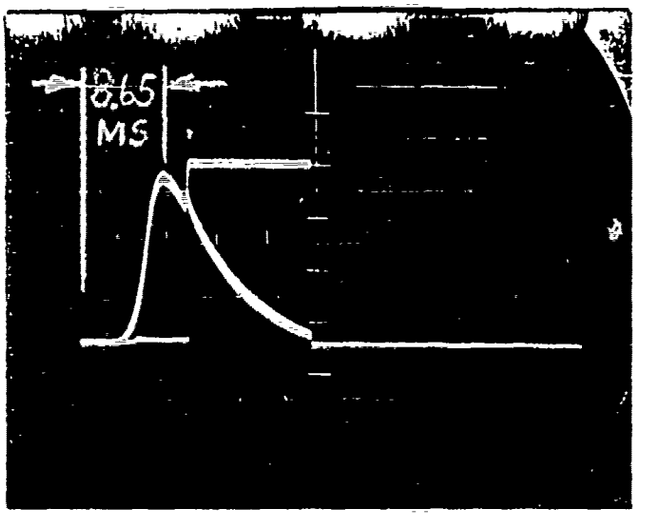

Pres = 30 mm Hg

$I_{Peak} = 5X10^{-9}A$

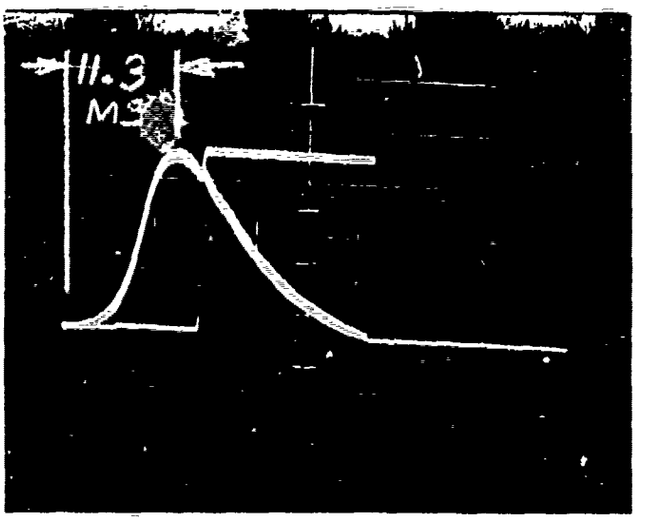

Pres = 15 mm Hg

$I_{Peak} = 7X10^{-9}A$

BLOWER SPEED = 800 Counts/sec

TOF PULSE vs Pressure

FIGURE 10B

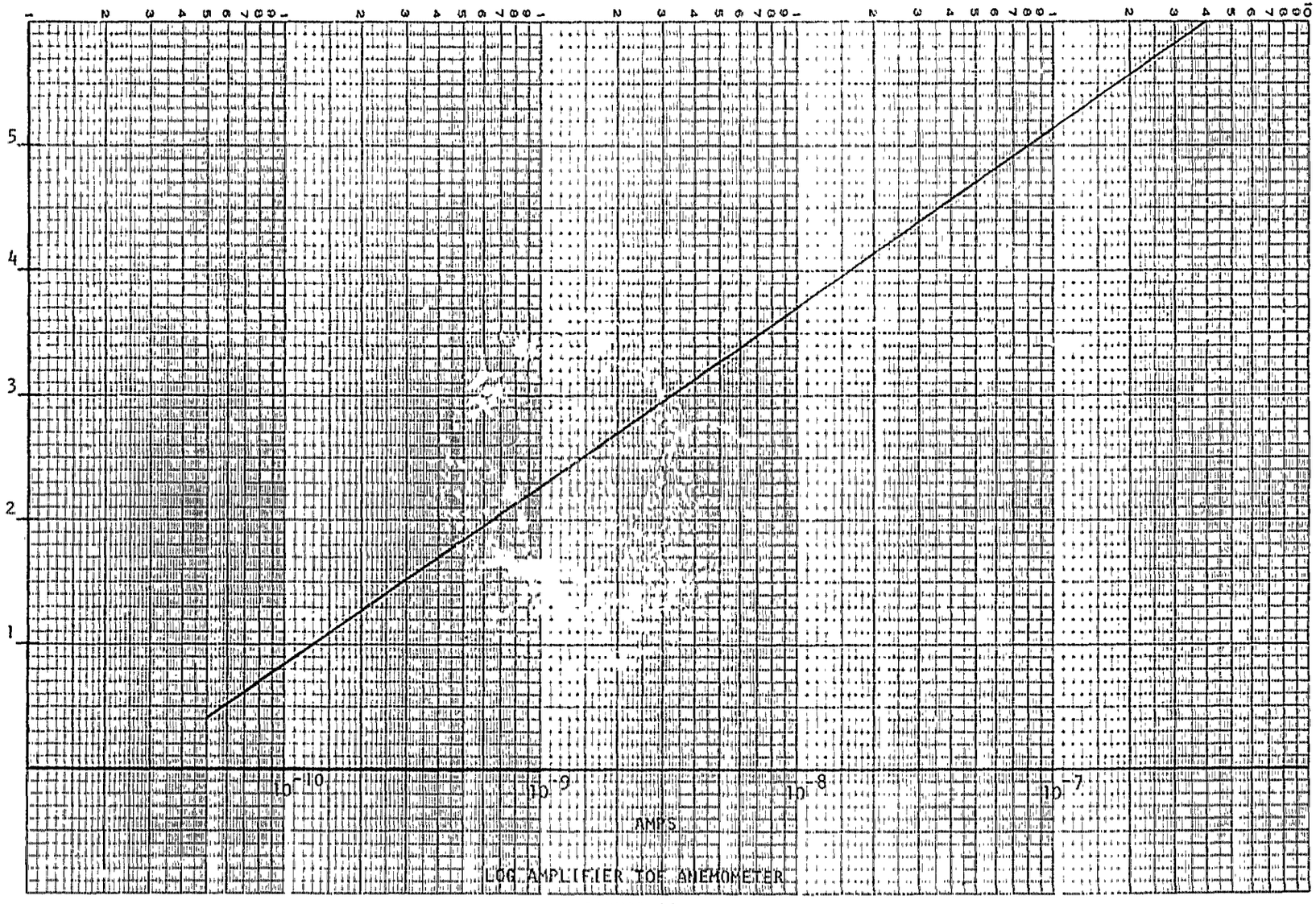

FIGURE 11

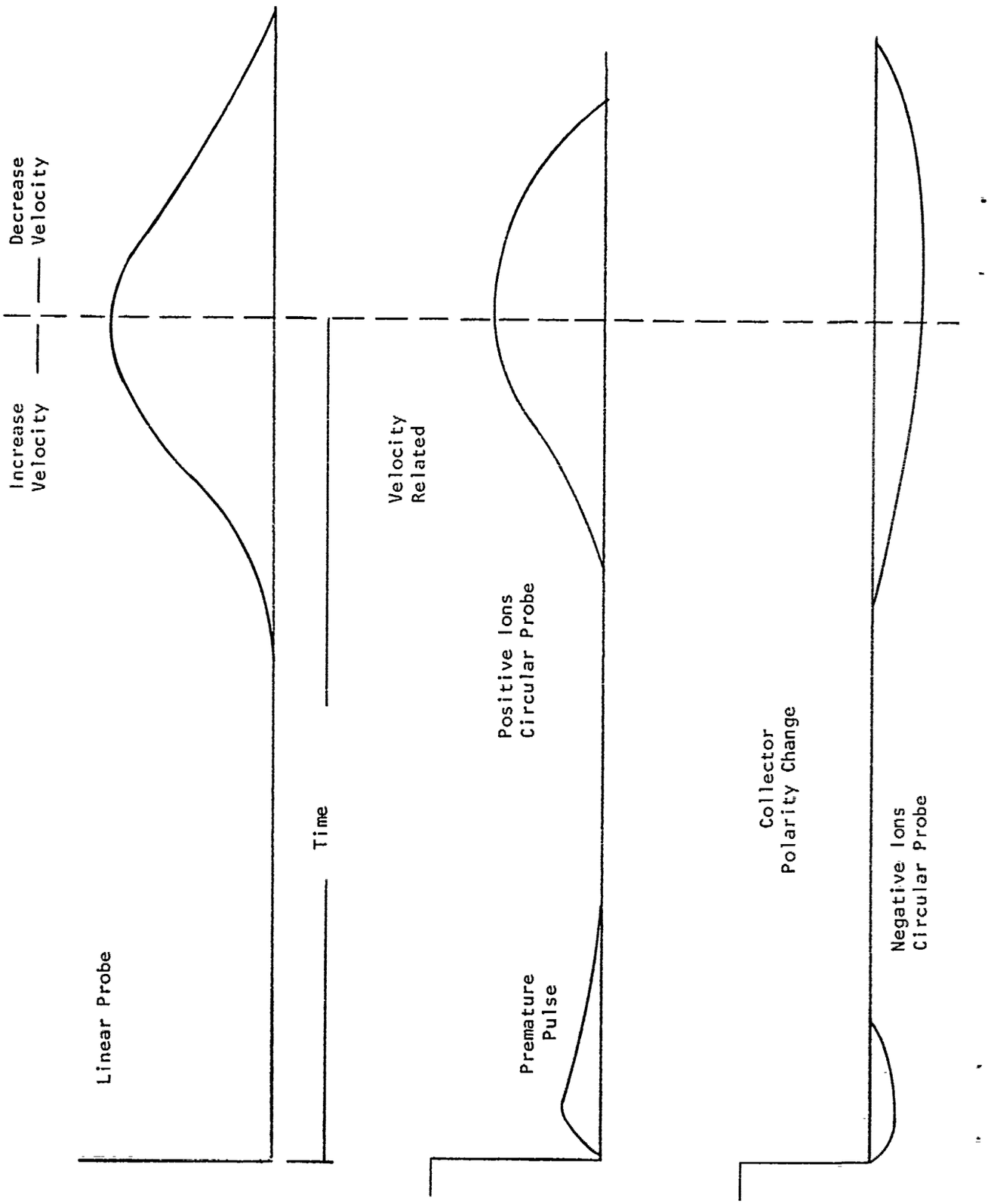

PULSE SHAPE
TIME OF FLIGHT ANEMOMETER

FIGURE 12

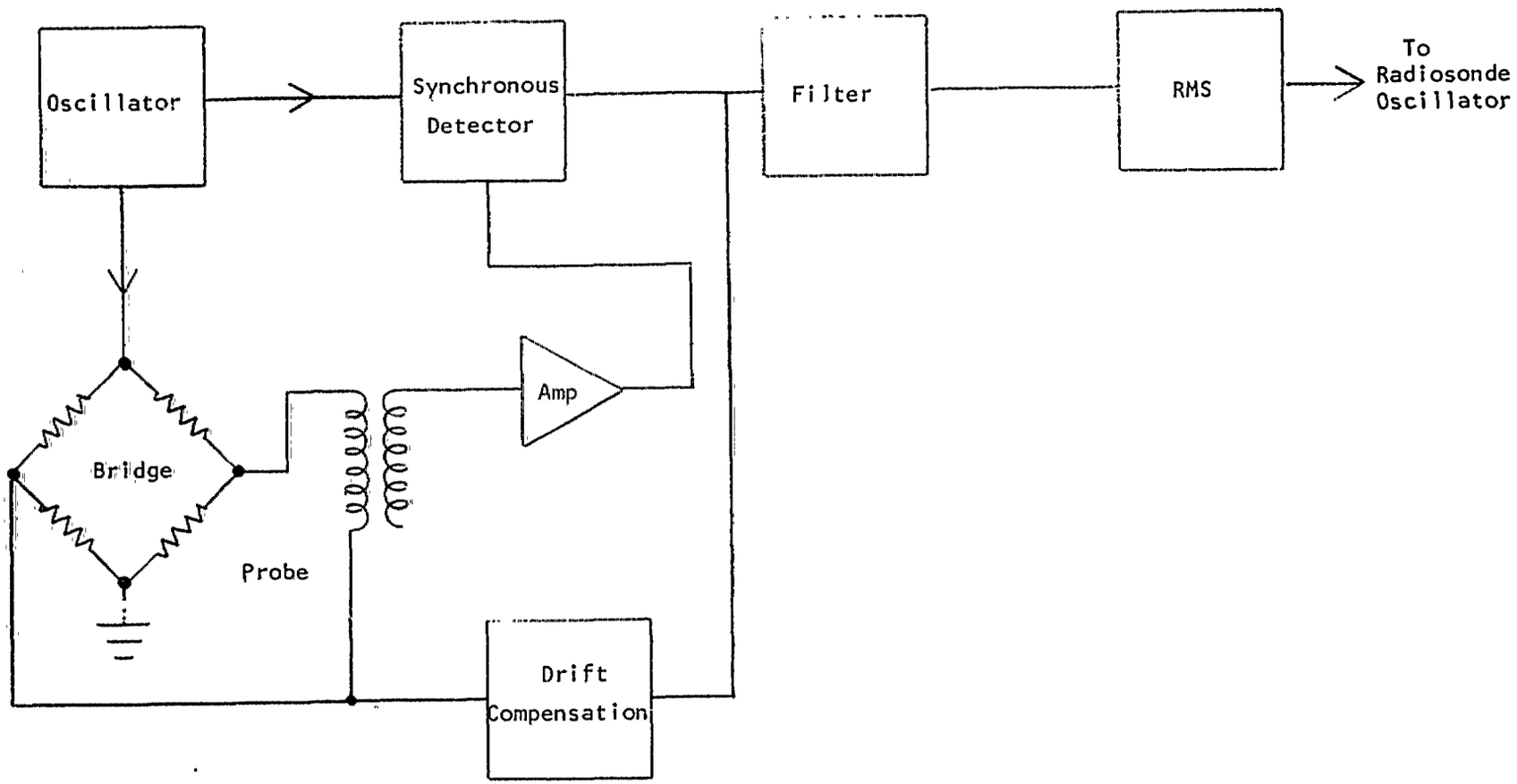

THERMOSONDE BLOCK DIAGRAM
FIGURE 13

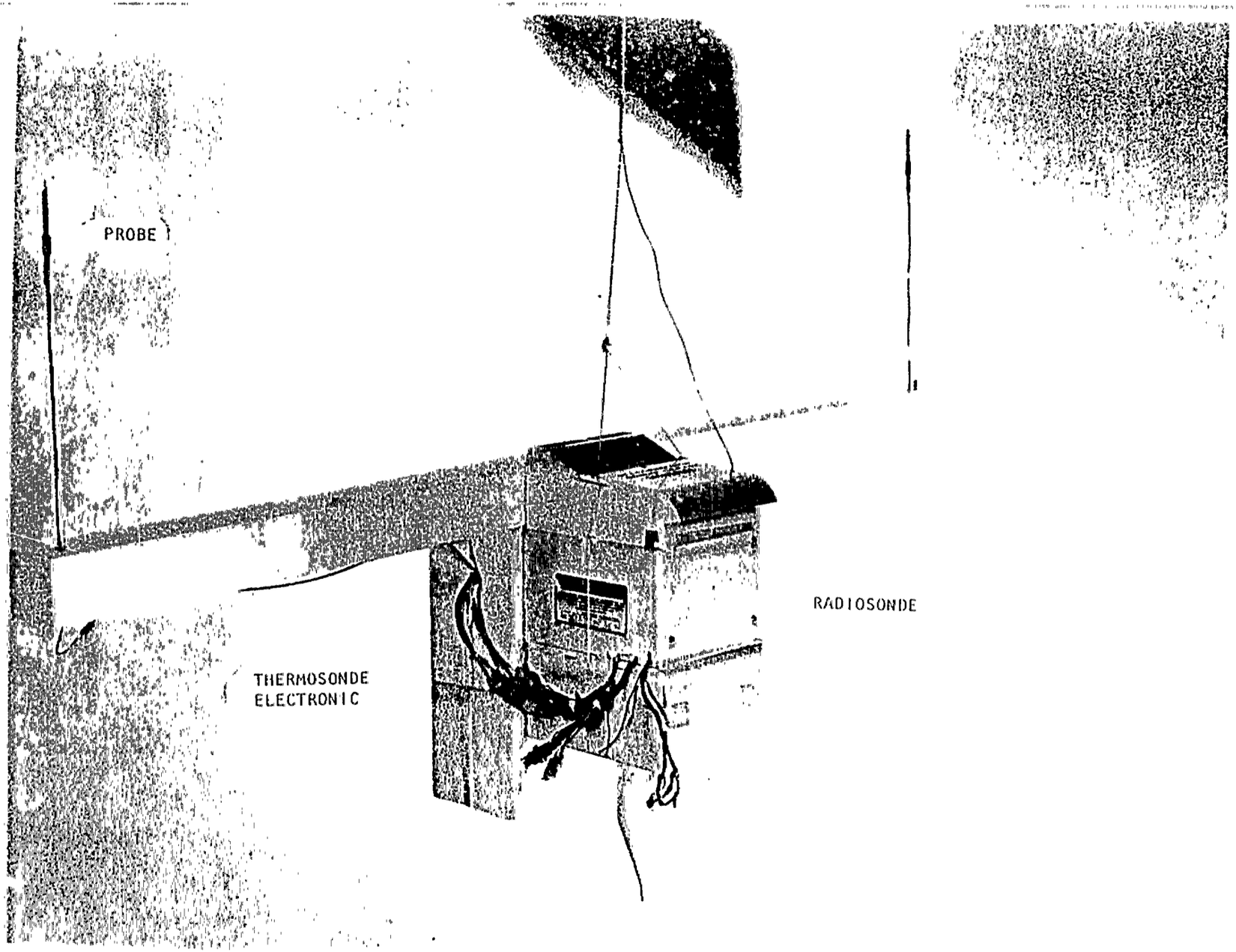

FIGURE 14

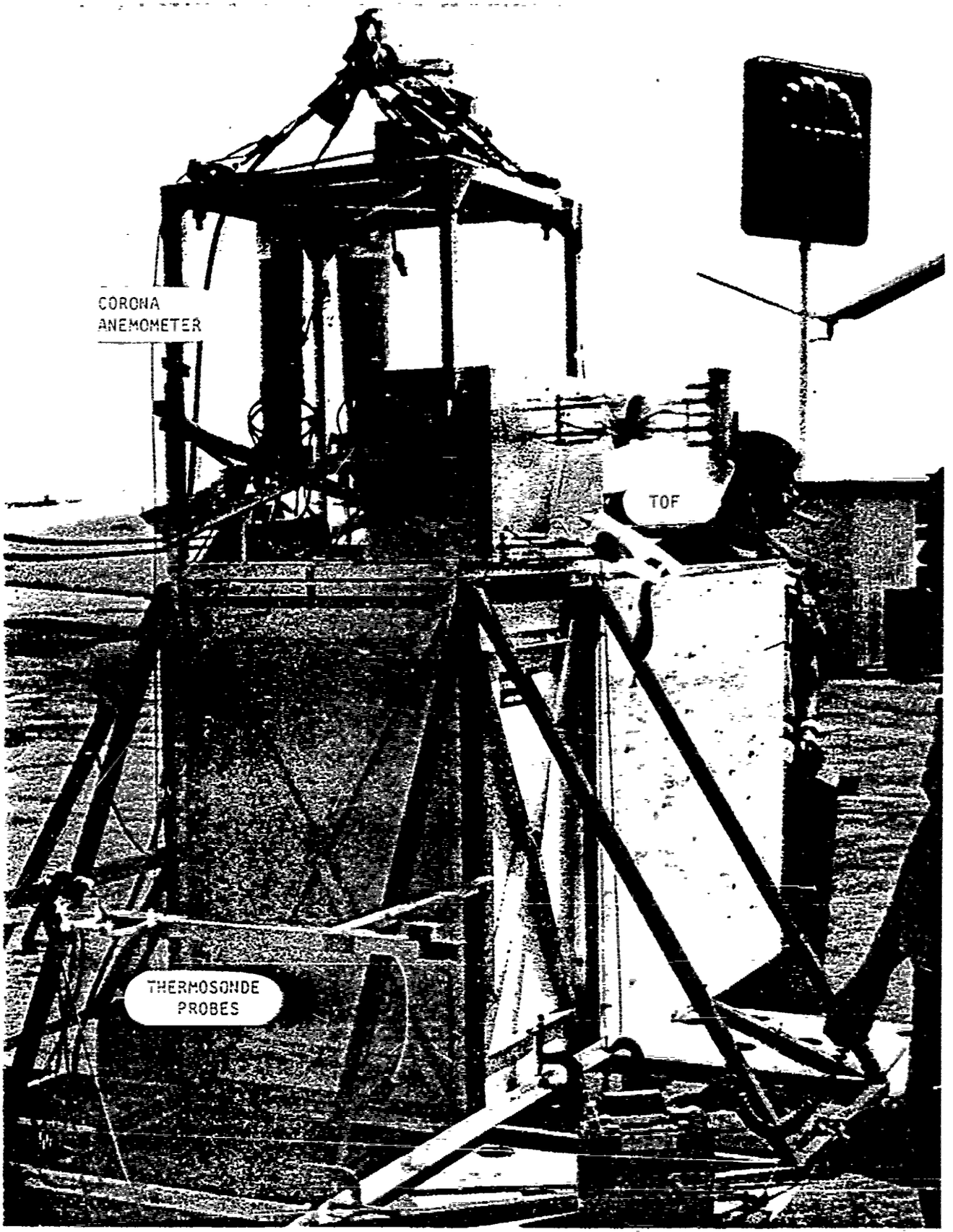

FIGURE 15

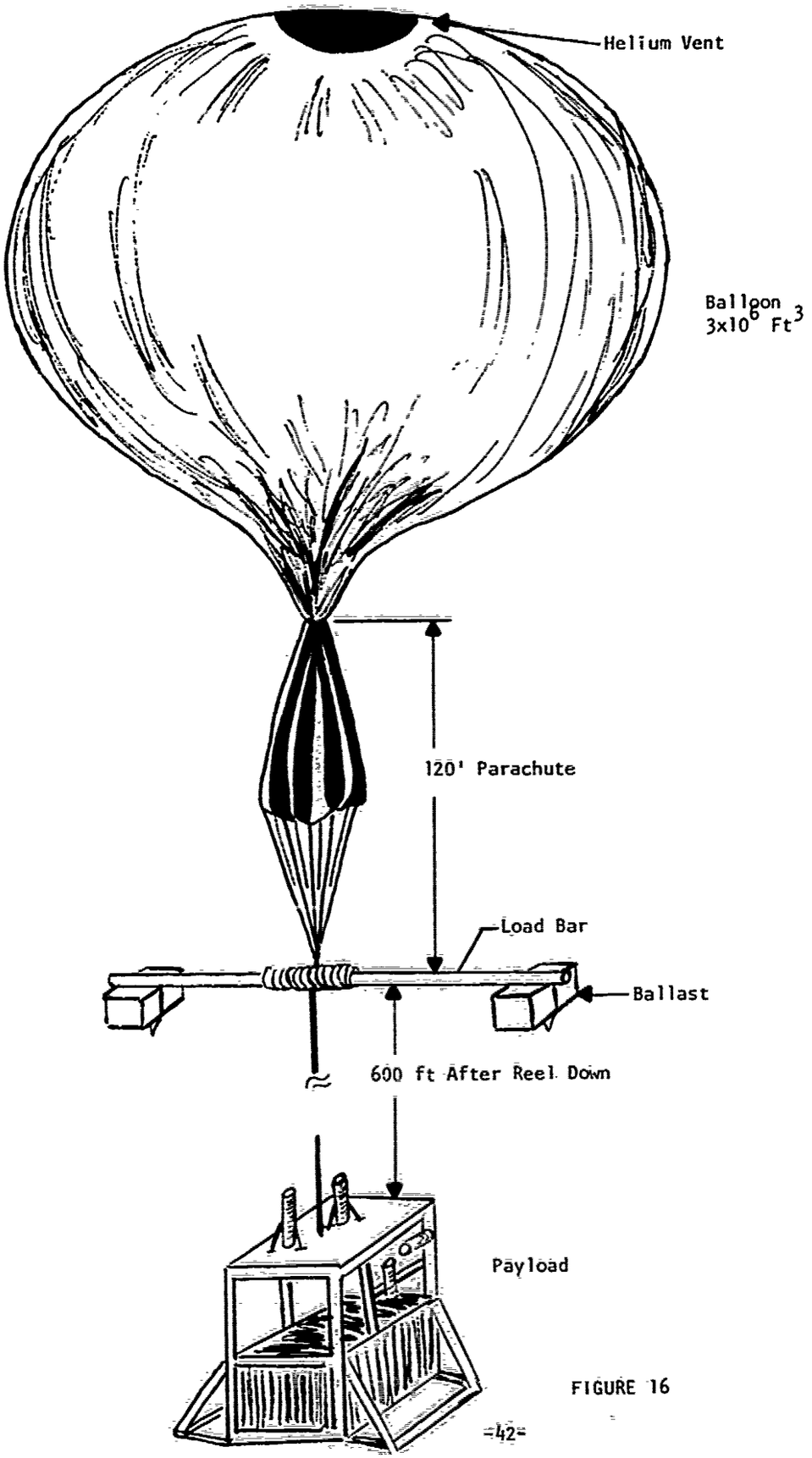
Helium Vent
Balloon
3x10^6 Ft^3
120' Parachute
Load Bar
Ballast
600 ft After Reel Down
Payload

FIGURE 16

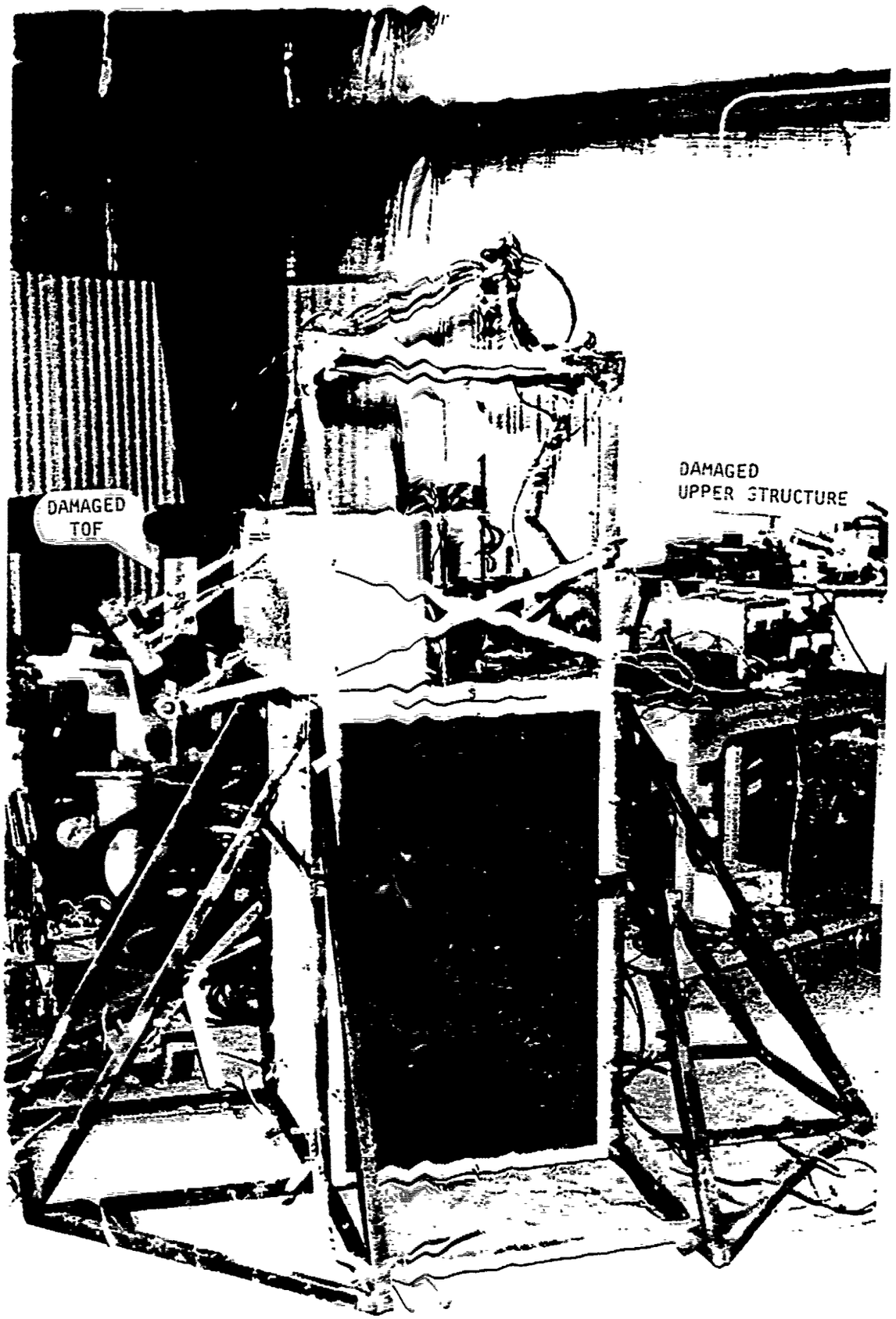

FIGURE 17

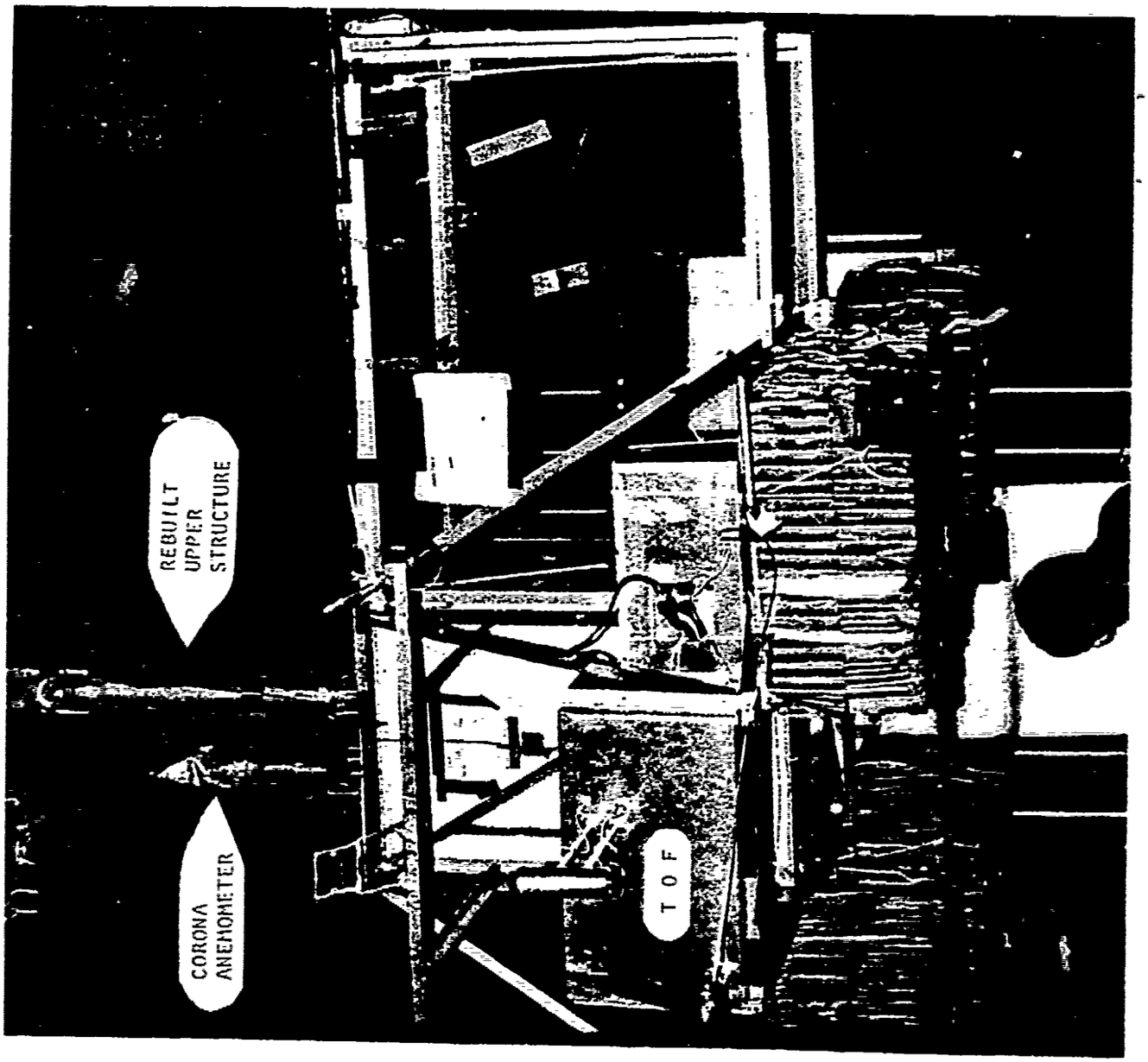

FIGURE 18

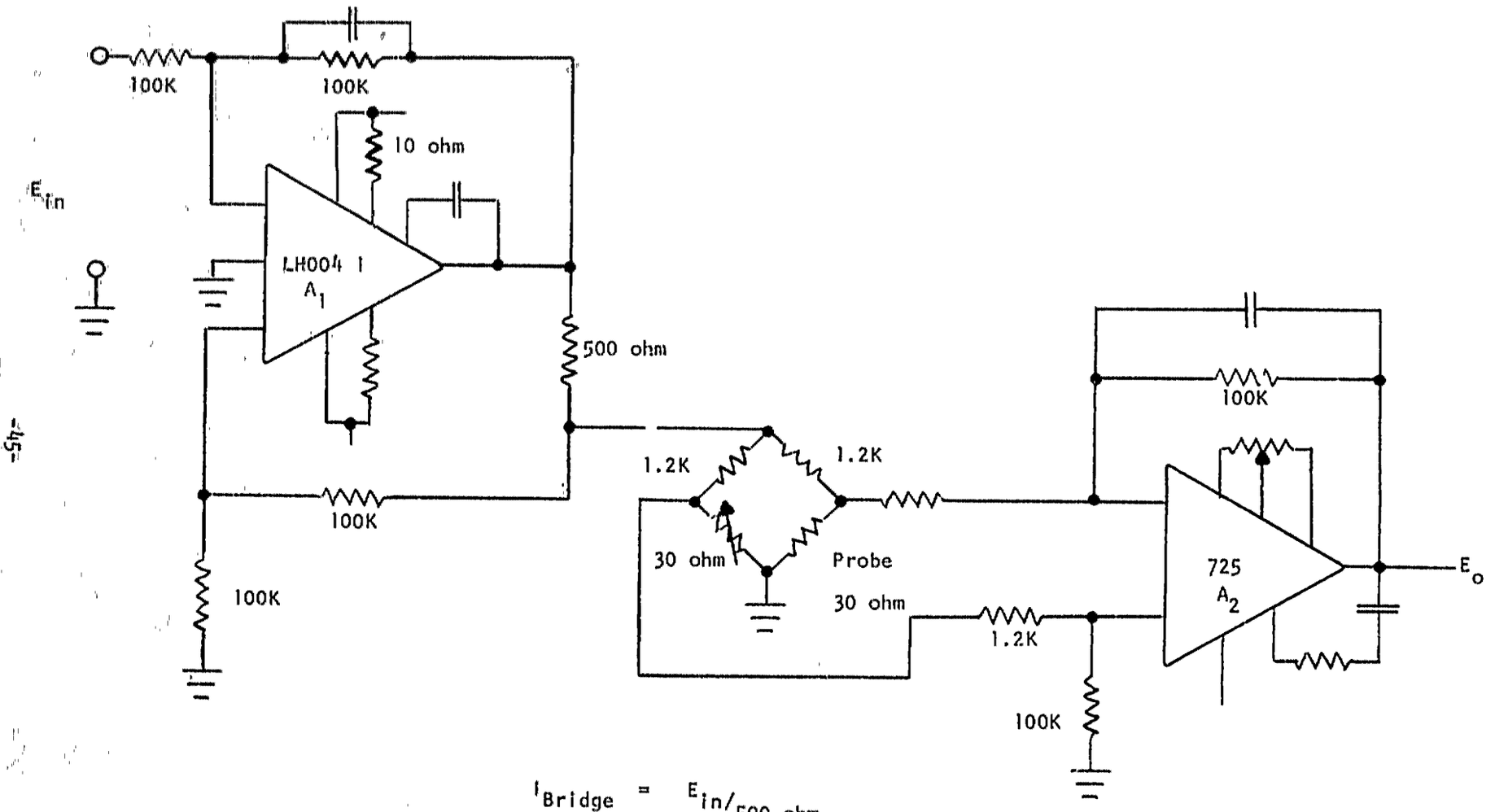

$$I_{Bridge} = E_{in}/_{500\ ohm}$$

CONVECTIVE HEAT TRANSFER
TEST CIRCUIT
FIGURE 19

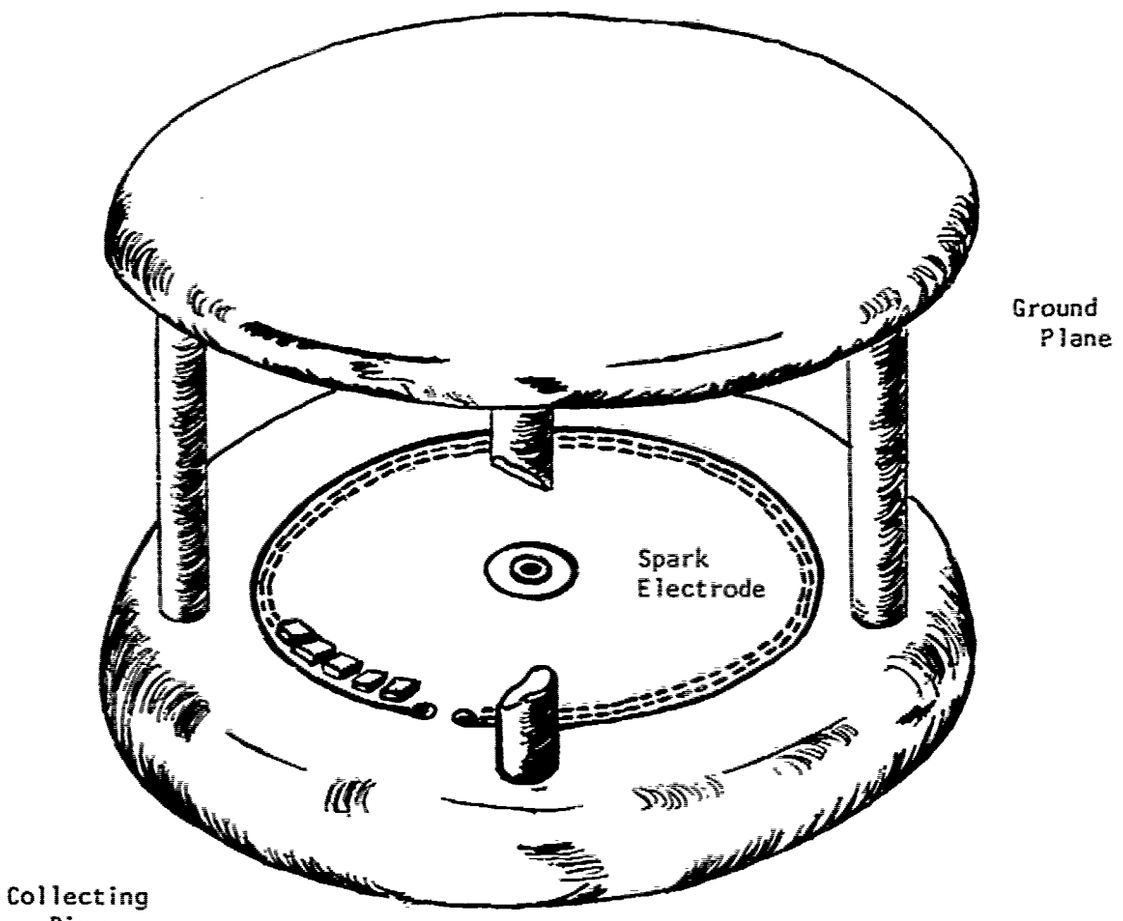

ILLUSTRATION
Two Dimensional TOF

FIGURE 20

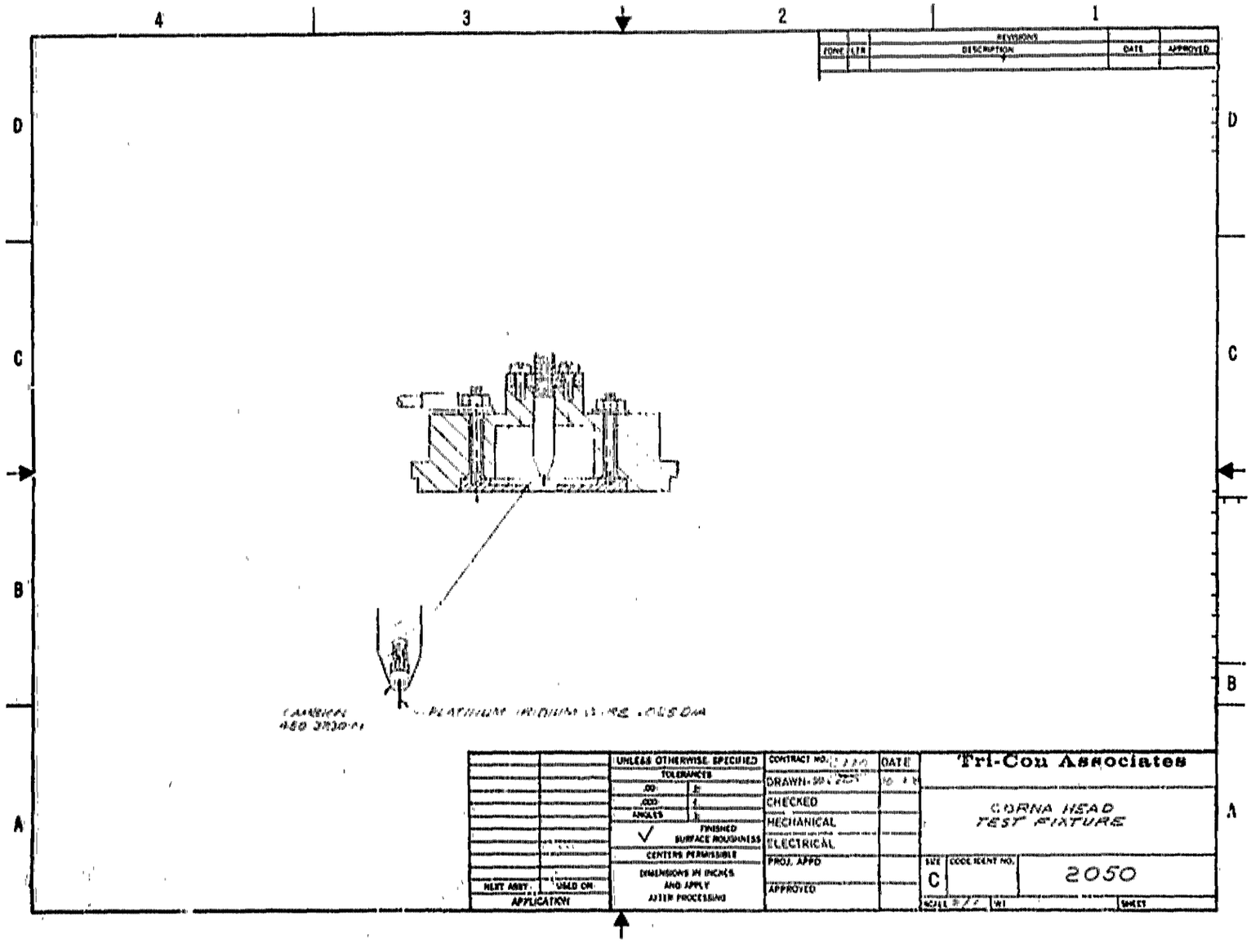
REVISIONS
ZONE
LTR
DESCRIPTION
DATE
APPROVED
UNLESS OTHERWISE SPECIFIED
TOLERANCES
.00
.000
ANGLES
FINISHED SURFACE ROUGHNESS
CENTERS PERMISSIBLE
DIMENSIONS IN INCHES AND APPLY AFTER PROCESSING
NEXT ASSY.
USED ON
APPLICATION
CONTRACT NO.
DATE
DRAWN
CHECKED
MECHANICAL
ELECTRICAL
PROJ. APPD
APPROVED
Tri-Con Associates
CORNA HEAD
TEST FIXTURE
SIZE
C
CODE IDENT NO.
2050
SCALE
WT
SHEET

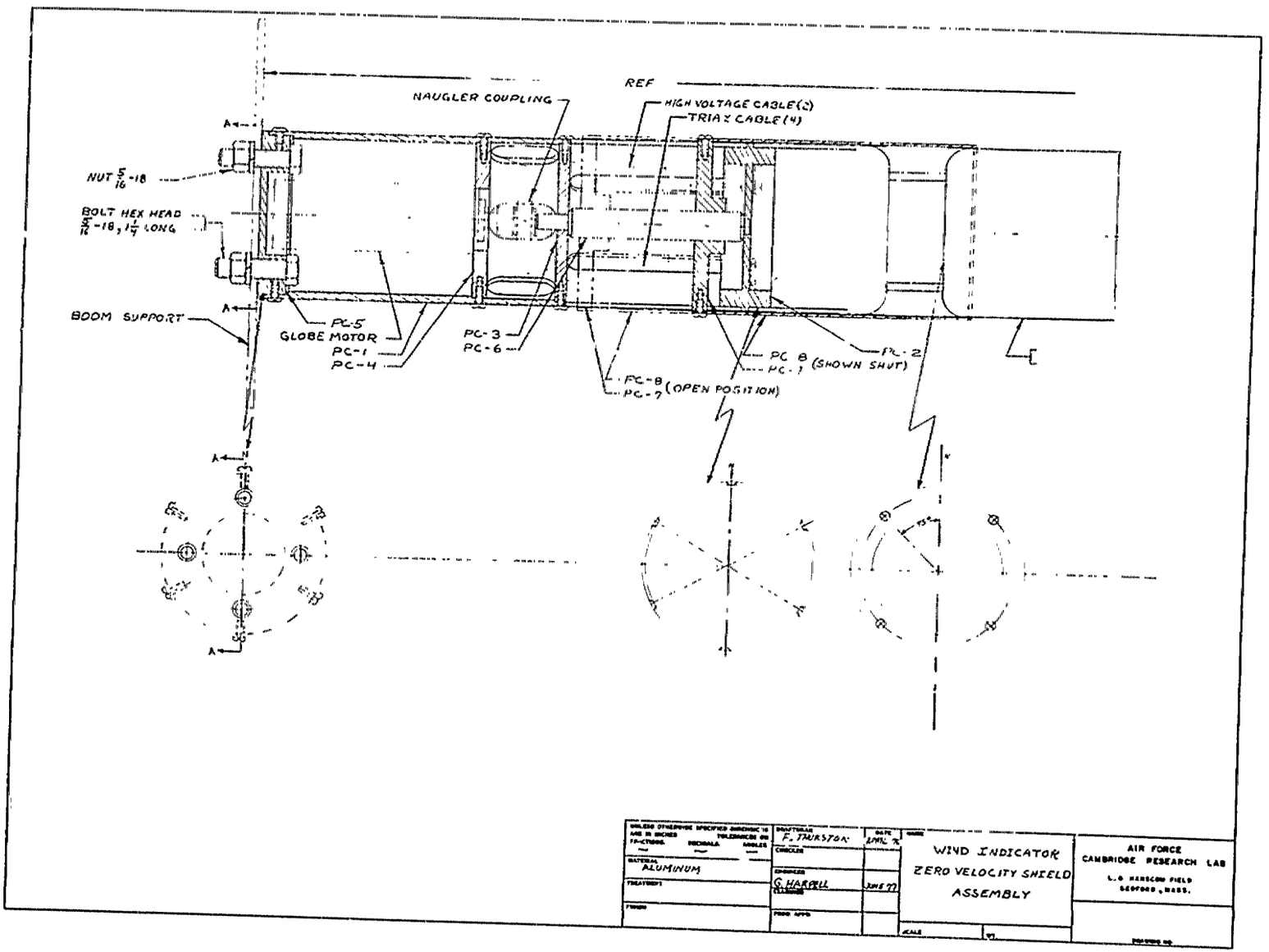
NAUGLER COUPLING
REF
HIGH VOLTAGE CABLE(2)
TRIAX CABLE(4)
NUT 5/16-18
BOLT HEX HEAD 5/16-18, 1 1/4 LONG
BOOM SUPPORT
PC-5
GLOBE MOTOR
PC-1
PC-4
PC-3
PC-6
PC-8
PC-7 (OPEN POSITION)
PC-8
PC-7 (SHOWN SHUT)
PC-2
A
A
A
A
B
B
B
B
C
C
C
C
D
D
D
D
E
E
E
E
F
F
F
F
G
G
G
G
H
H
H
H
J
J
J
J
K
K
K
K
L
L
L
L
M
M
M
M
N
N
N
N
P
P
P
P
R
R
R
R
S
S
S
S
T
T
T
T
U
U
U
U
V
V
V
V
W
W
W
W
X
X
X
X
Y
Y
Y
Y
Z
Z
Z
Z
1
1
1
1
2
2
2
2
3
3
3
3
4
4
4
4
5
5
5
5
6
6
6
6
7
7
7
7
8
8
8
8
9
9
9
9
10
10
10
10

BY. . . DATE . SUBJECT. AMPLIFIER For Split Plate SHEET NO. . . OF . .
CHKD. BY . . DATE. . . . . JOB NO.

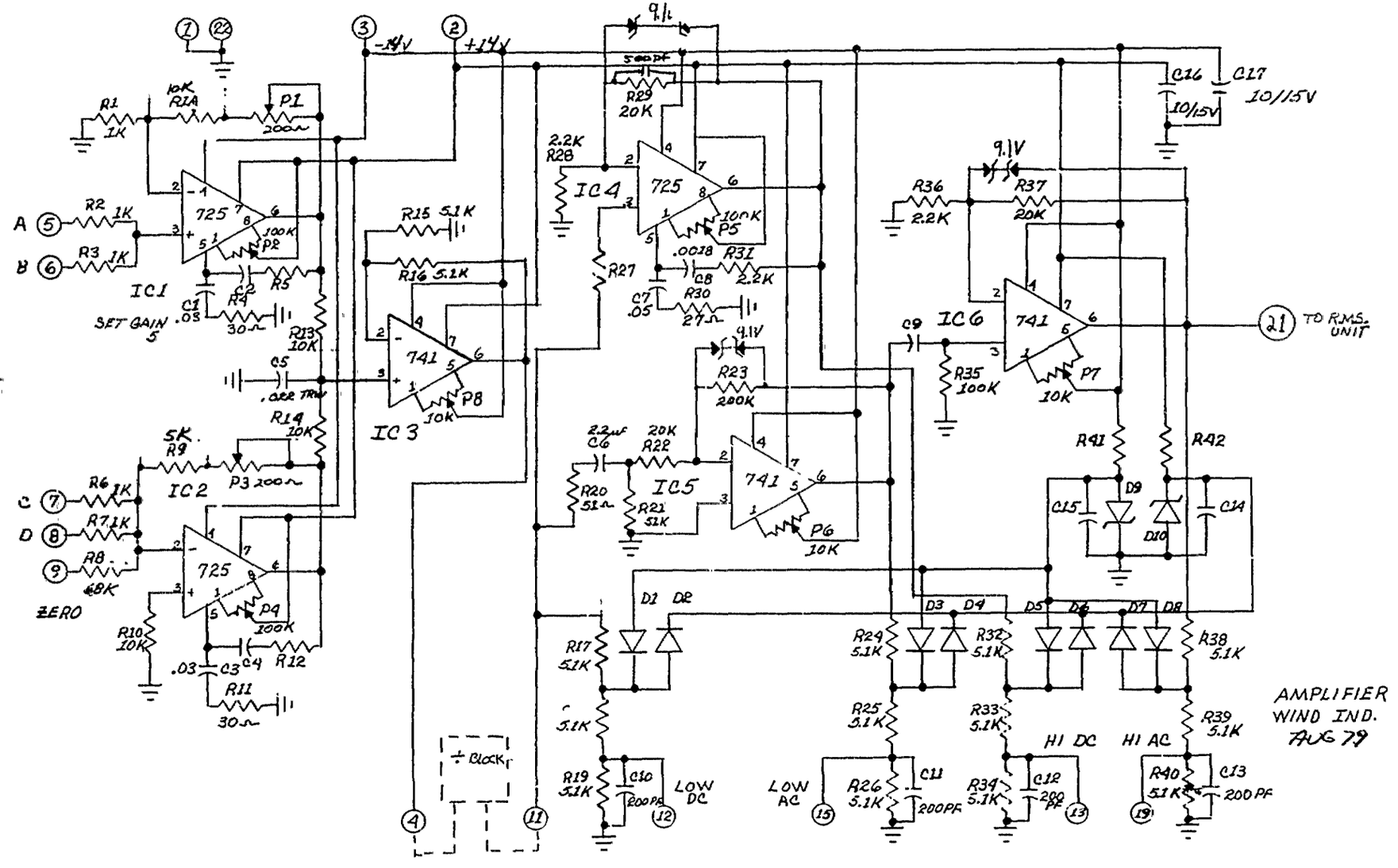

BY..... DATE ..... SUBJECT ..... SHEET NO. ..... OF .....
CHKD. BY..... DATE ..... JOB NO. .....

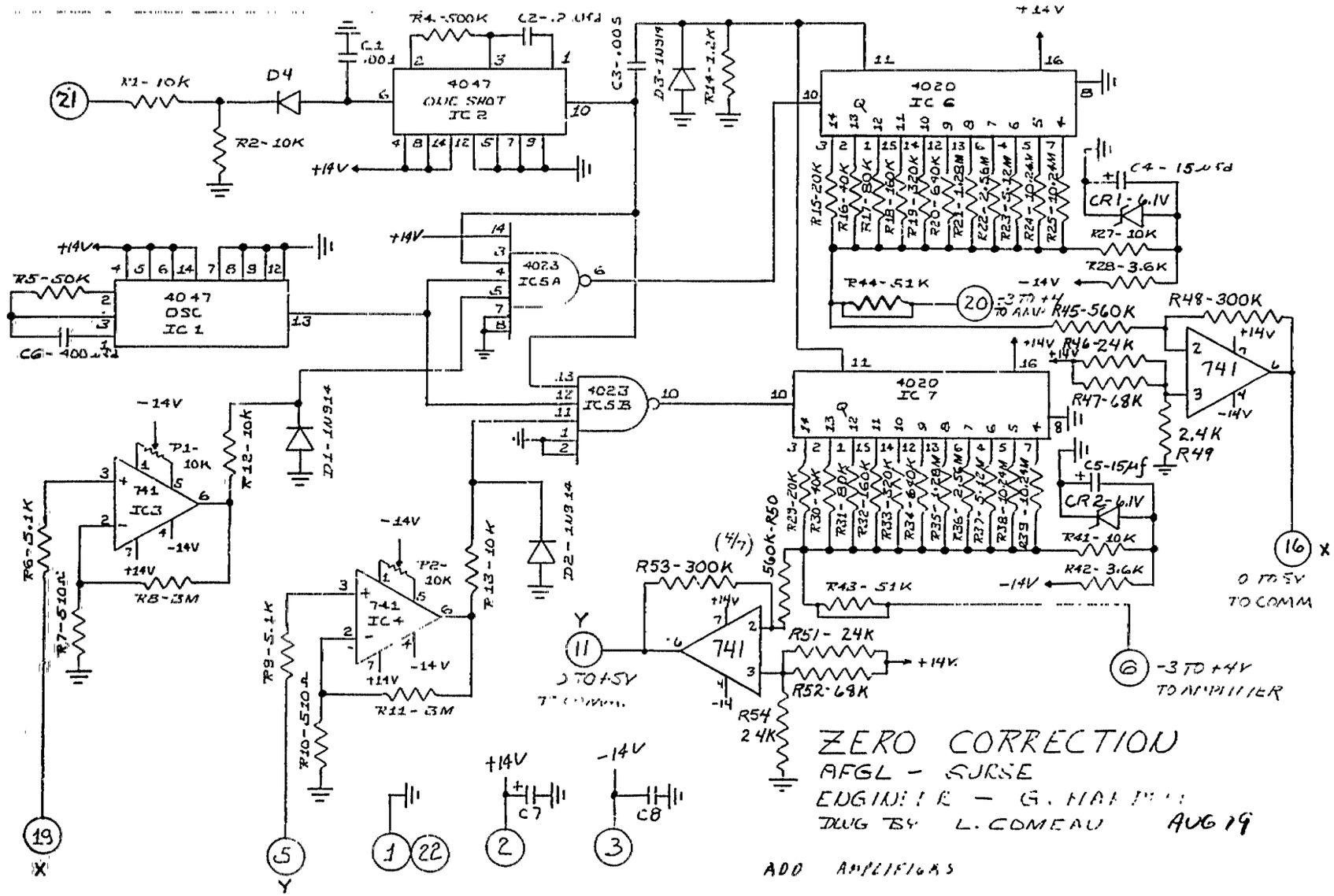

ZERO CORRECTION
AFGL - SURSE
ENGINEER - G. MAIN
DWG BY L. COMEAU AUG 19

ADD AMPLIFIERS

-05-

BY JRB DATE
CHKD. BY DATE
SUBJECT CARD 15 JULY 78
Temp. Circuit Press Circuit & P-ETT
SHEET NO. OF
JOB NO.

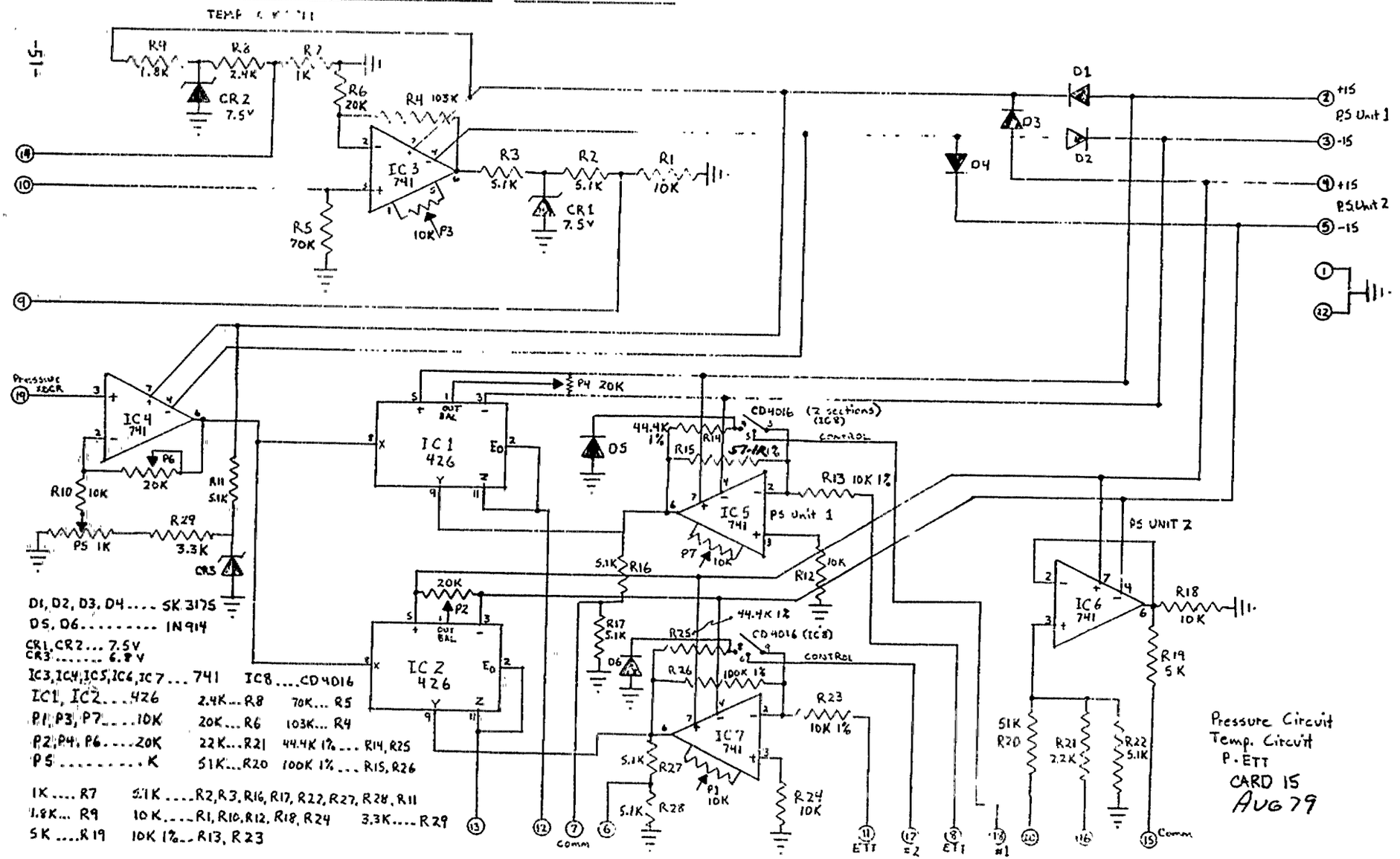

D1, D2, D3, D4 .... SK 3175
D5, D6 ..... IN914
CR1, CR2 ... 7.5V
CR3 ..... 6.8V
IC3, IC4, IC5, IC6, IC7 ... 741 IC8 ....CD4016
IC1, IC2 ... 426 2.4K ... R8 70K ... R5
P1, P3, P7 ... 10K 20K ... R6 103K ... R4
P2, P4, P6 ... 20K 22K ... R21 44.4K 1% ... R14, R25
P5 ..... K 51K ... R20 100K 1% ... R15, R26
1K .... R7 5.1K R2, R3, R16, R17, R22, R27, R28, R11
1.8K ... R9 10K .... R1, R10, R12, R18, R24 3.3K R29
5K .... R19 10K 1% .. R13, R23

Pressure Circuit
Temp. Circuit
P-ETT
CARD 15
AUG 79

BY WDM DATE SUBJECT CARD II. AUG 19 SHEET NO. .OF
CHKD. BY DATE ΔET JOB NO.
P.Ett

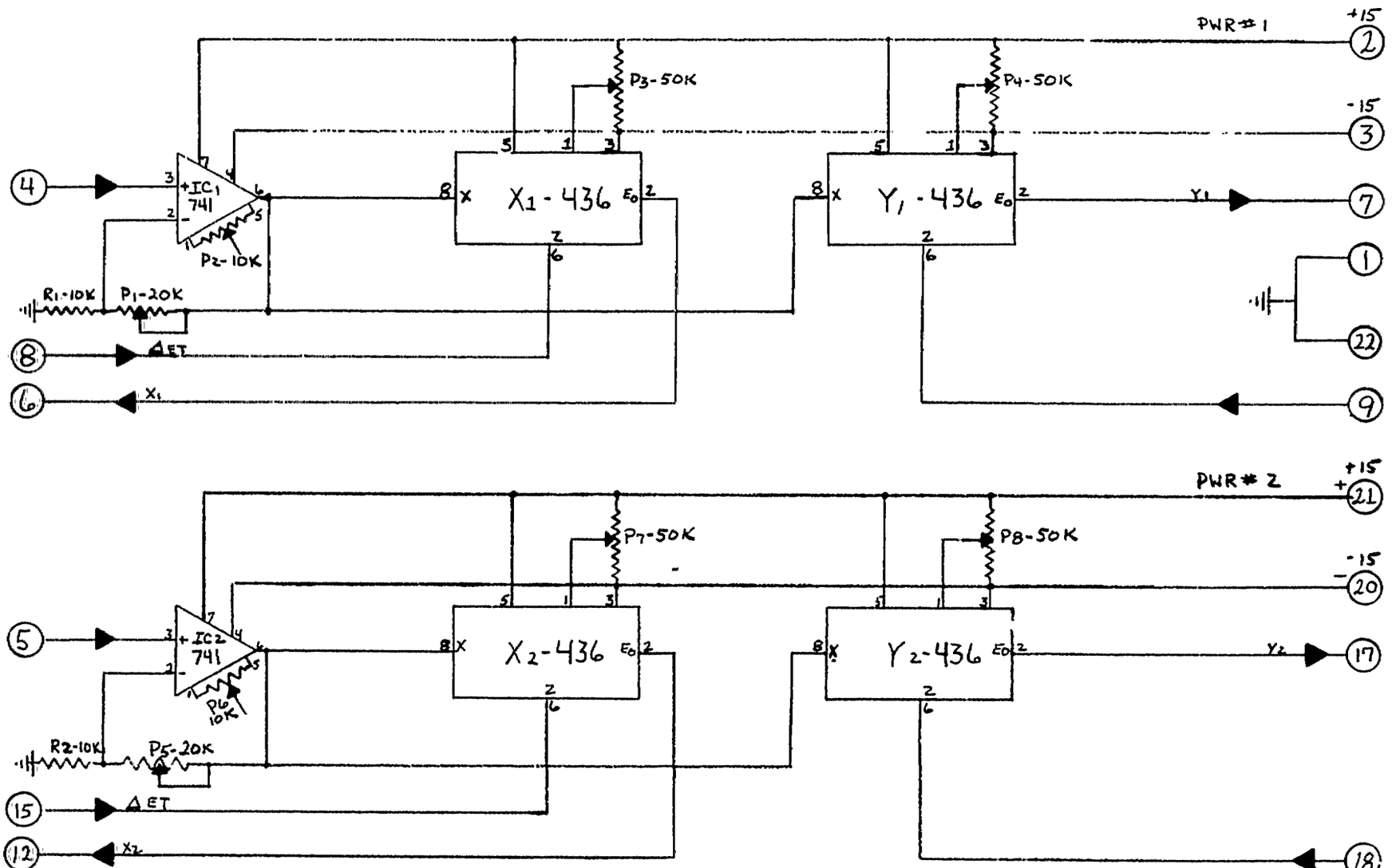

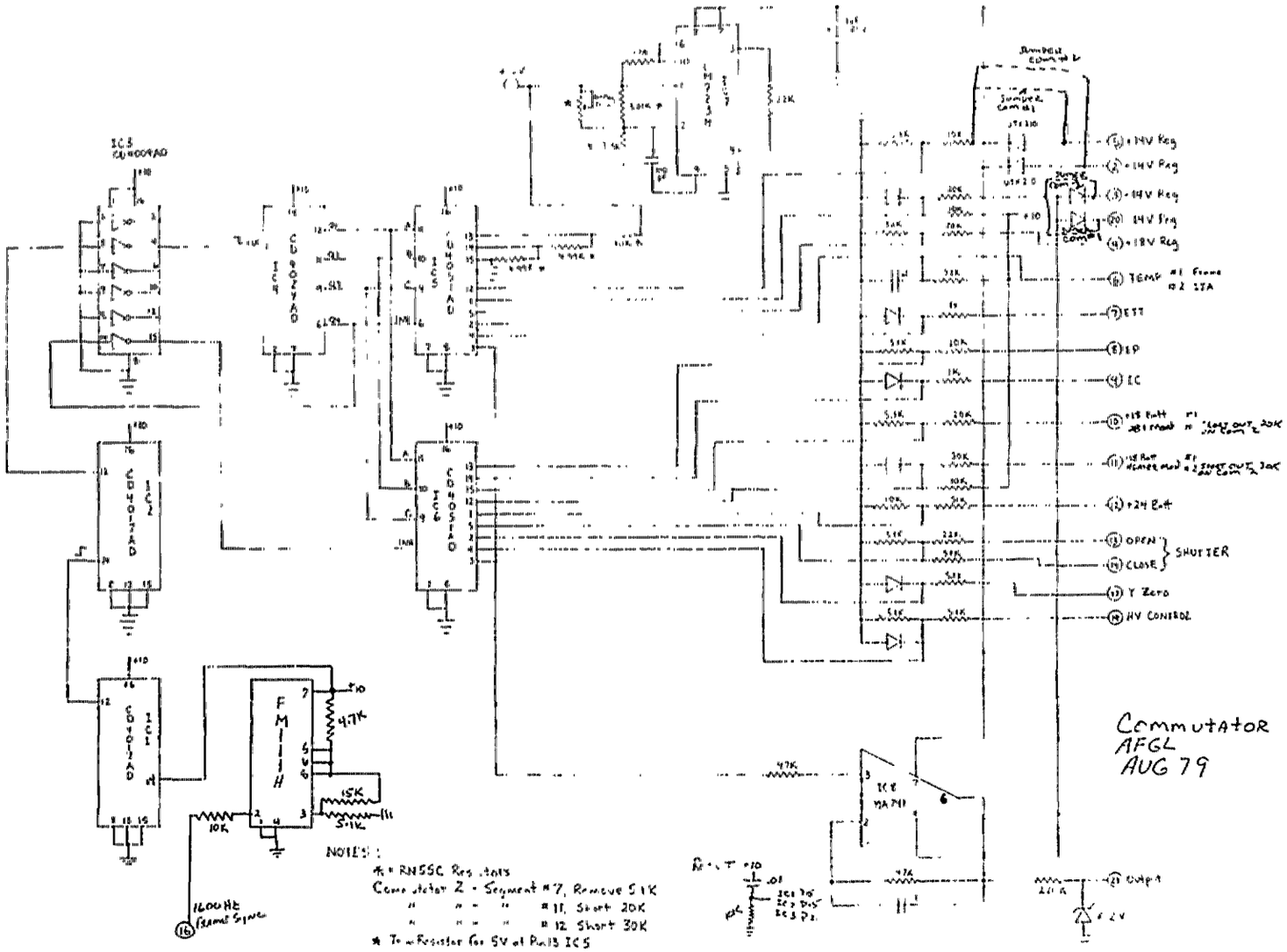

Commutator
AFGL
AUG 79

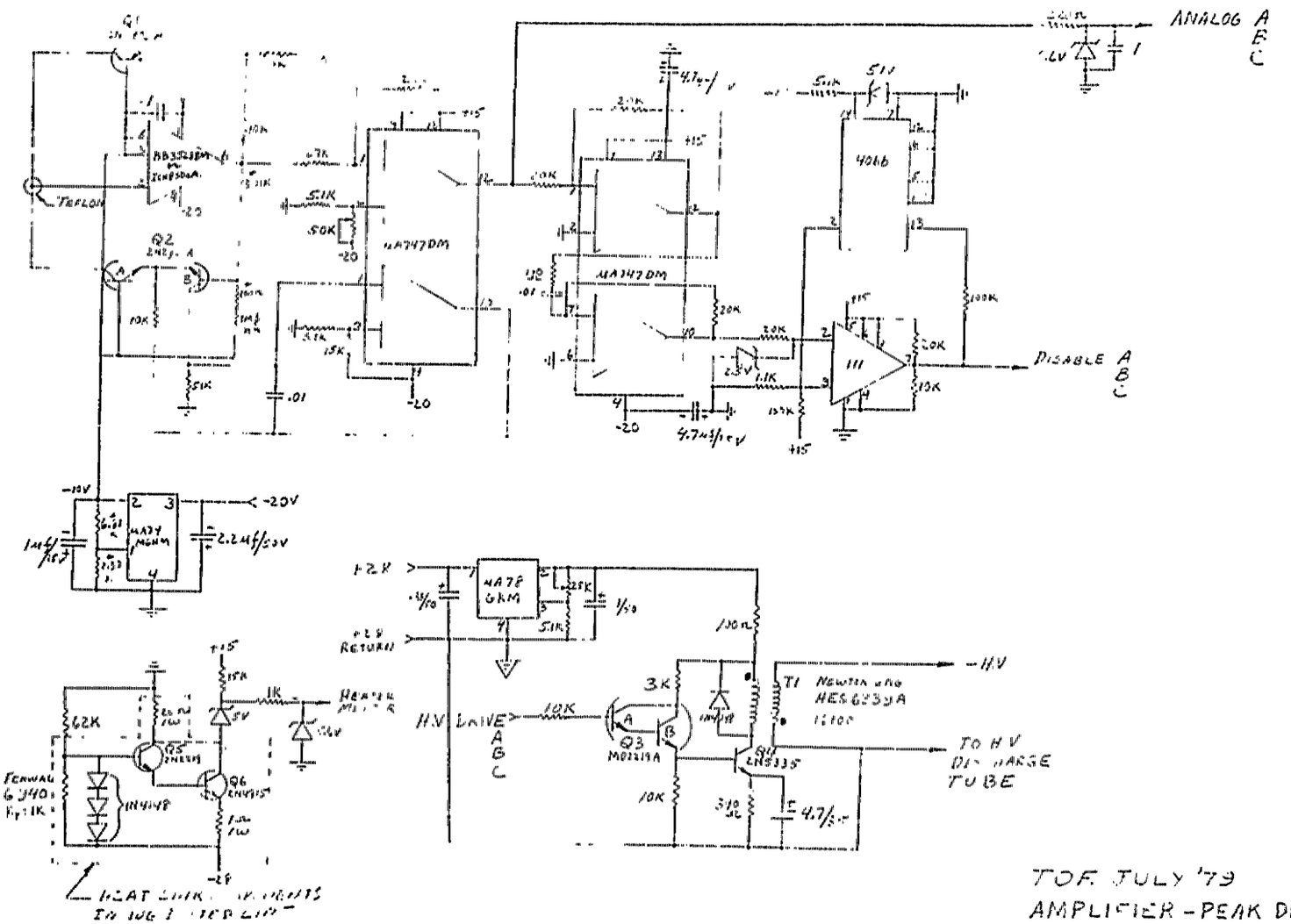

TOF JULY '79
AMPLIFIER - PEAK DET
+HV ASSEMBLY

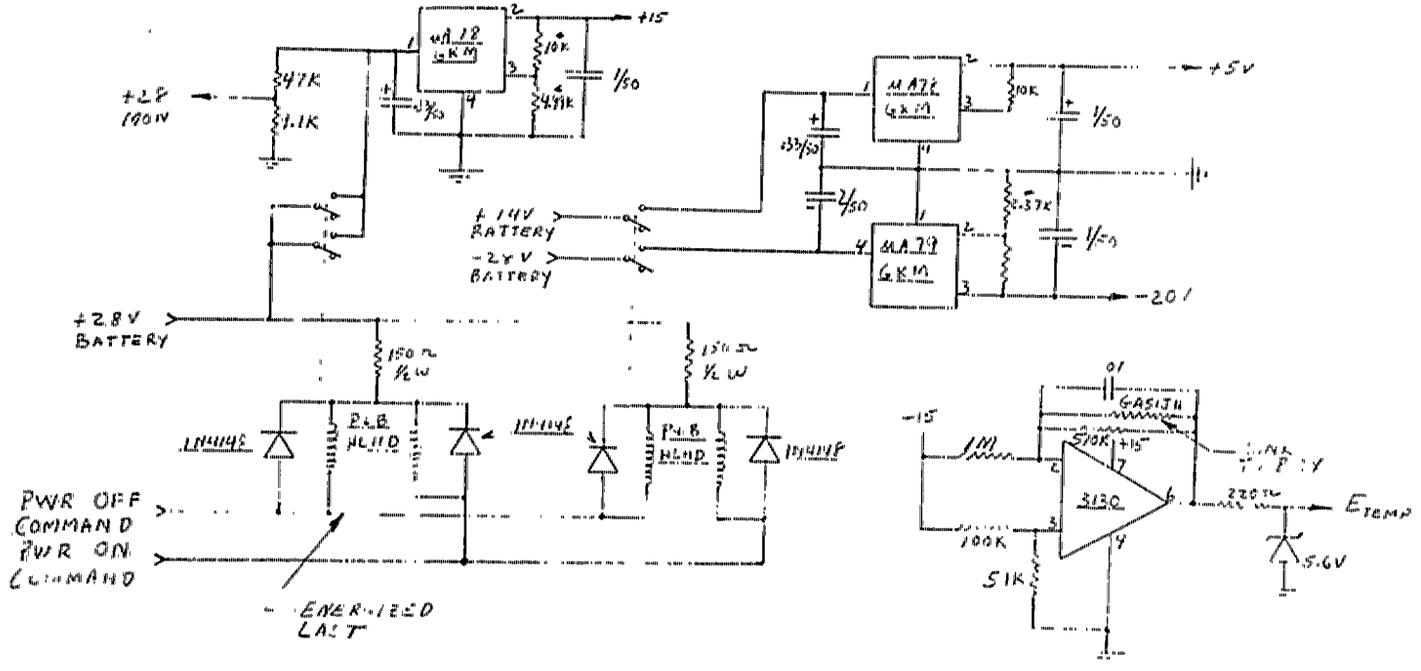

T.O.F JULY '79
POWER CONTROL
+ E[illegible]

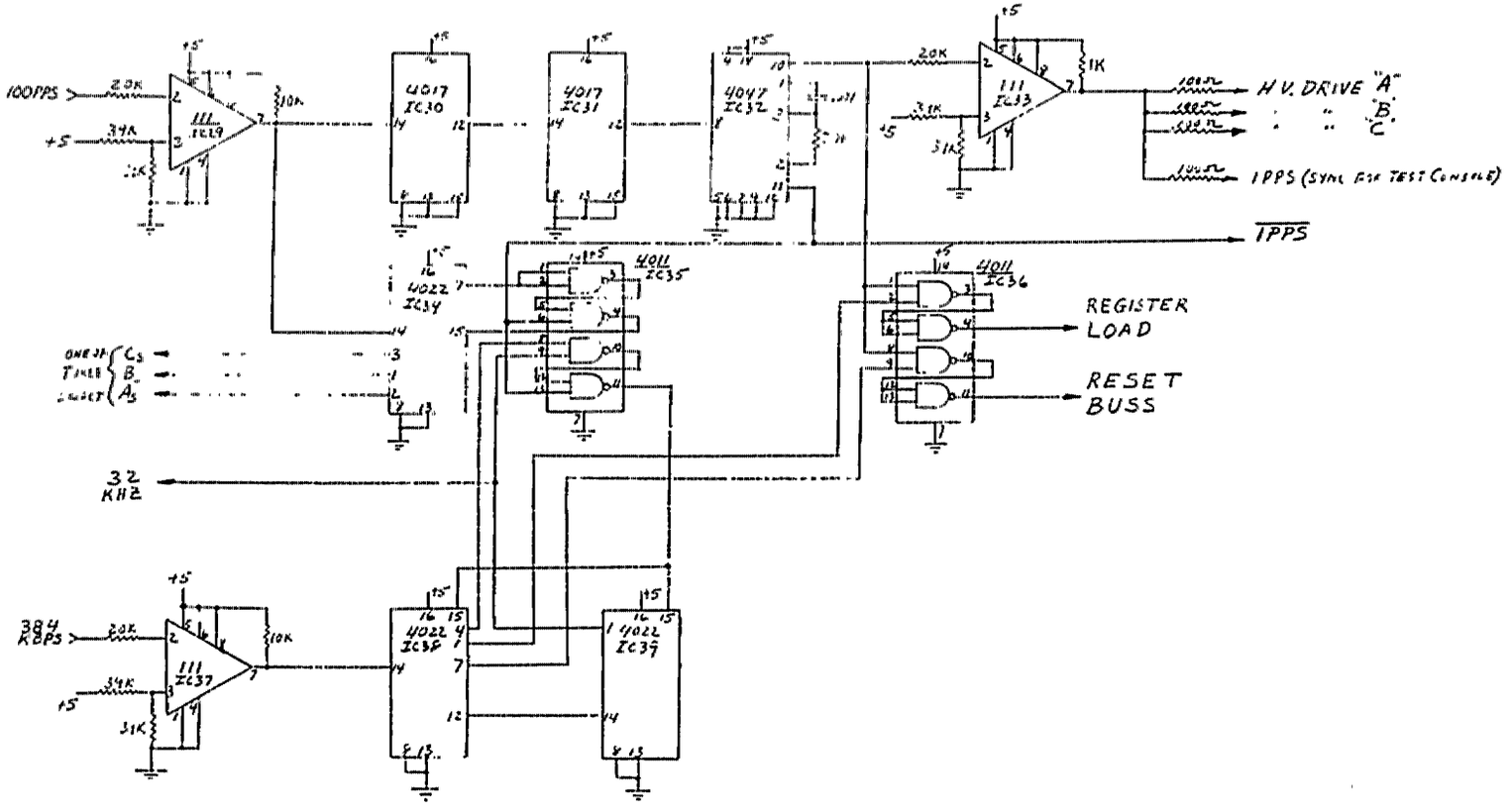

T.O.F. JULY '79
TIMING CIRCUITS

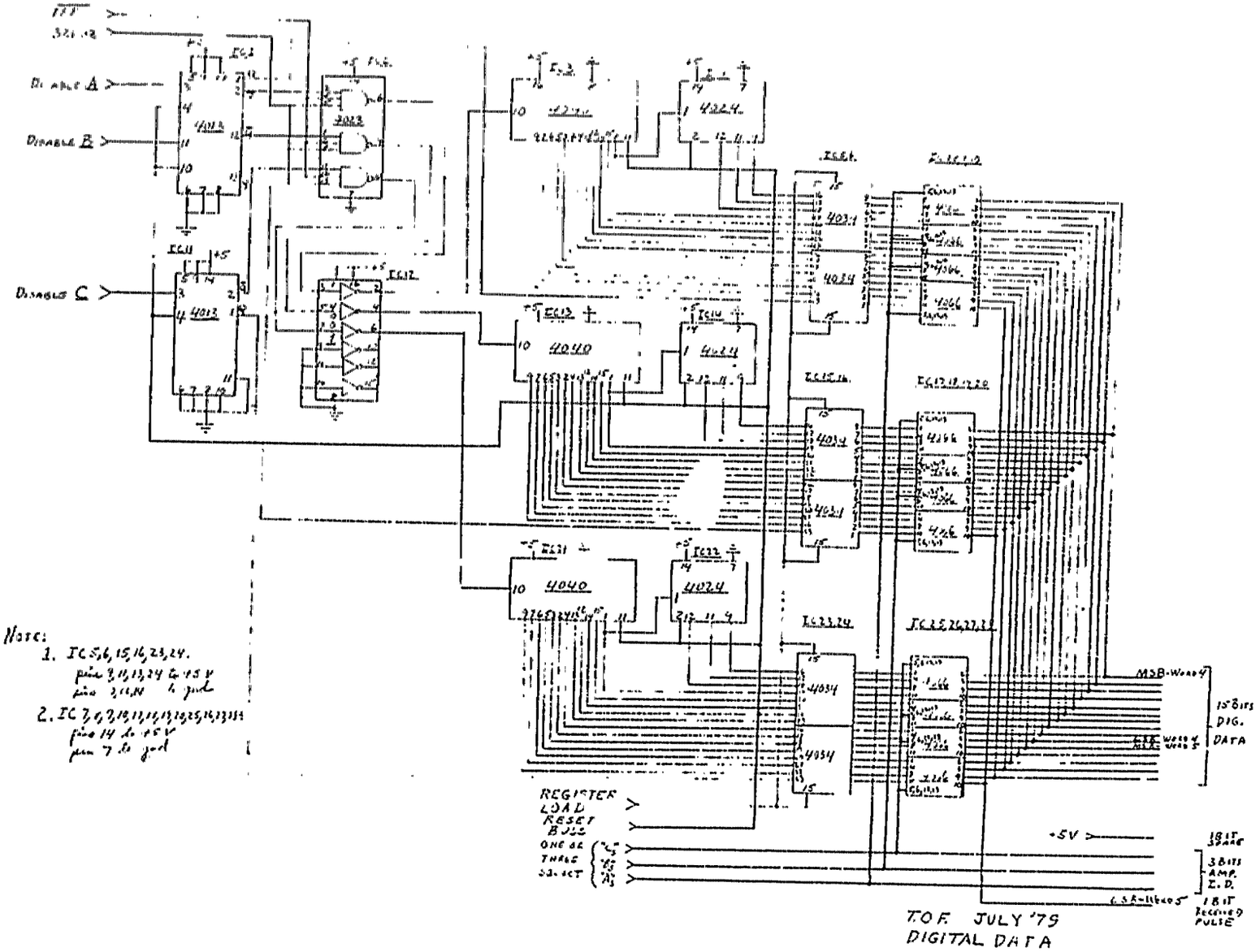

Note:

1. IC 5, 6, 15, 16, 23, 24.
   pins 3, 11, 13, 24 to +5 V
   pins 2, 12, 14 to gnd
2. IC 7, 8, 9, 10, 17, 18, 19, 20, 25, 26, 27, 28
   pin 14 to +5 V
   pin 7 to gnd

T.O.F. JULY '79
DIGITAL DATA

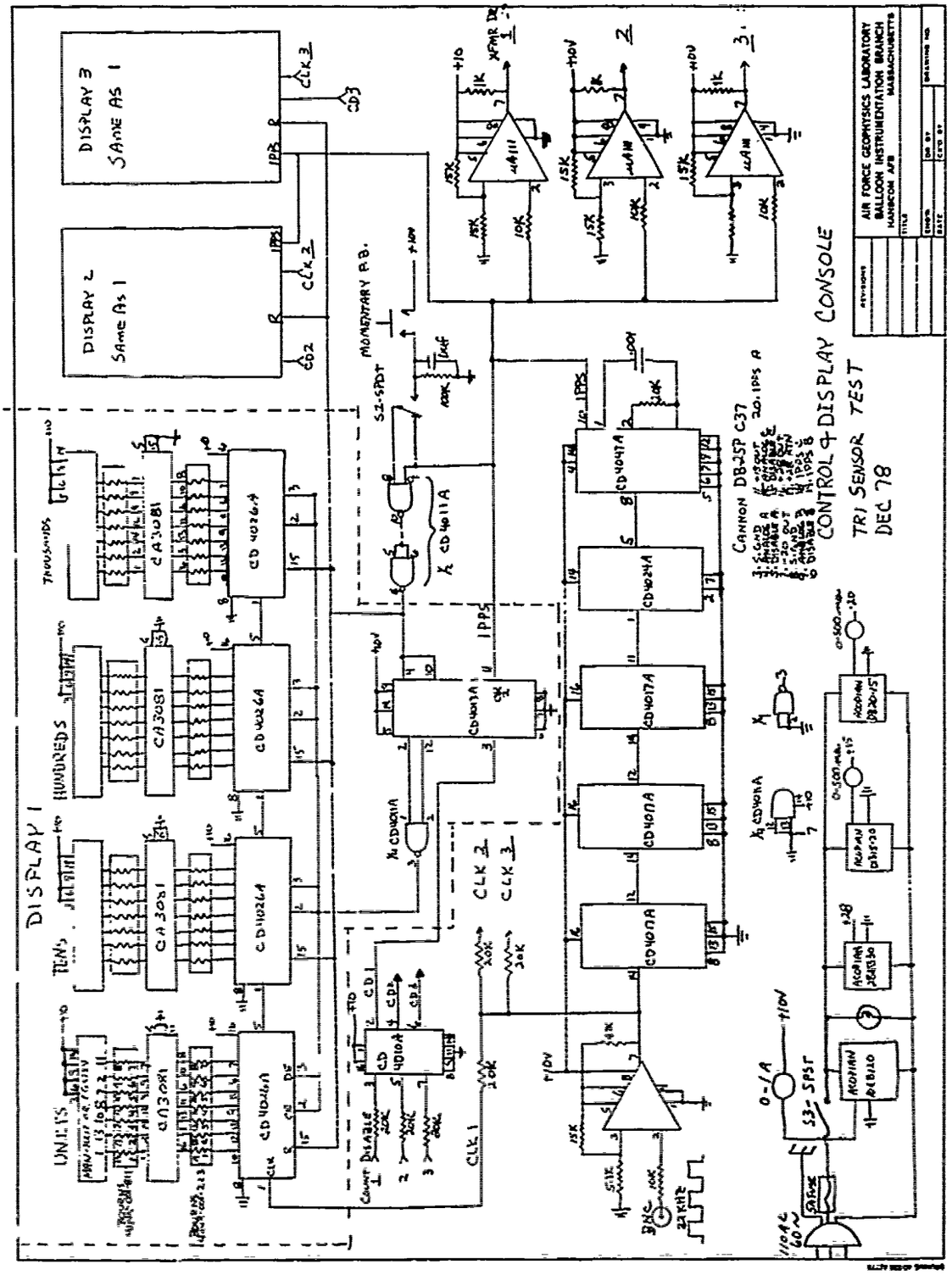
DISPLAY 1
DISPLAY 2
SAME AS 1
DISPLAY 3
SAME AS 1
UNITS
TENS
HUNDREDS
THOUSANDS
CA3081
CD4026A
CD4011A
CD4017A
CD4024A
CD4047A
CD4010A
CD4007A
MOMENTARY P.B.
S2-SPDT
CLK 1
CLK 2
CLK 3
CANNON DB25P C37
CONTROL & DISPLAY CONSOLE
TRI SENSOR TEST
DEC 78
AIR FORCE GEOPHYSICS LABORATORY
BALLOON INSTRUMENTATION BRANCH
HANSCOM AFB MASSACHUSETTS

REVISIONS				
ZONE	LTR	DESCRIPTION	DATE	APPROVED

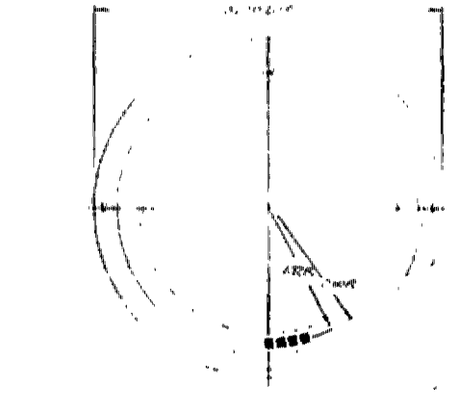

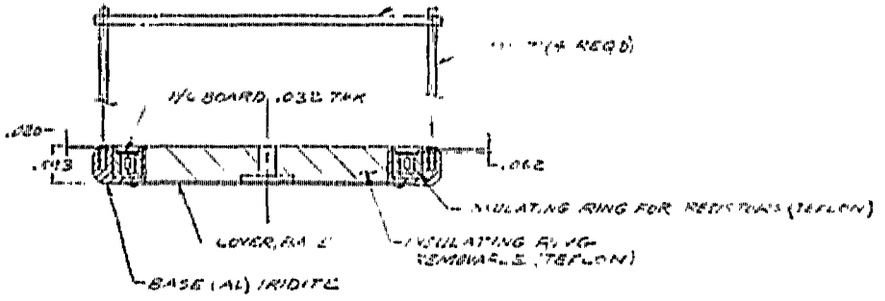

NEXT ASSY	USED ON	UNLESS OTHERWISE SPECIFIED	CONTRACT NO.	DATE	Tri-Con Associates
APPLICATION		TOLERANCES	DRAWN		
		.XX ±	CHECKED		
		.OOO ±	MECHANICAL		
		ANGLES ±	ELECTRICAL		
		✓ FINISHED SURFACE ROUGHNESS	PROJ. APPD		
		CENTERS PERMISSIBLE	APPROVED		
		DIMENSIONS IN INCHES AND APPLY AFTER PROCESSING			SIZE C; CODE IDENT NO.
					SCALE; WT; SHEET

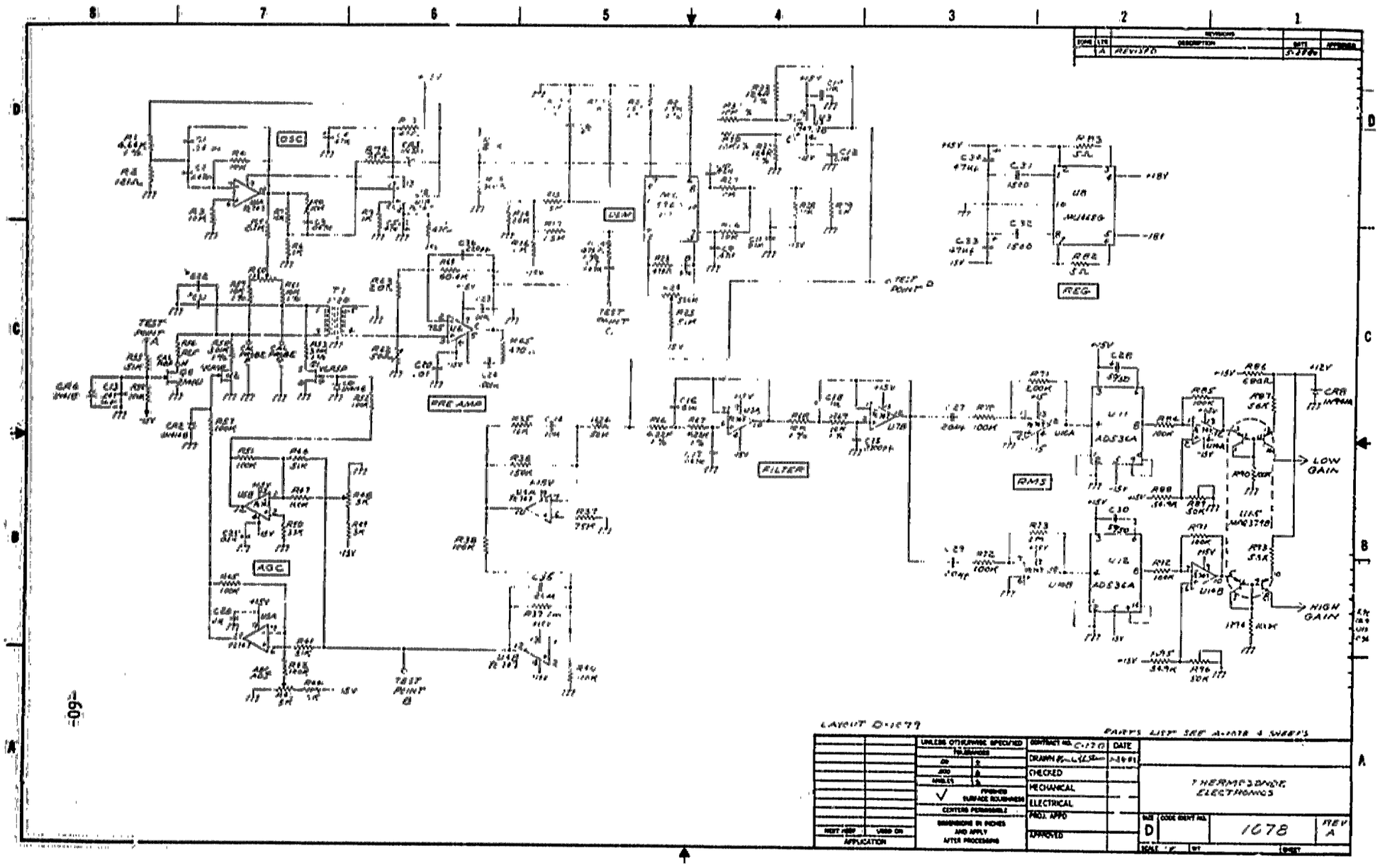
OSC
VCXO
PRE AMP
FILTER
AGC
RMS
REG
LOW GAIN
HIGH GAIN
TEST POINT A
TEST POINT B
TEST POINT C
TEST POINT D
ADJ
ADJ
ADJ

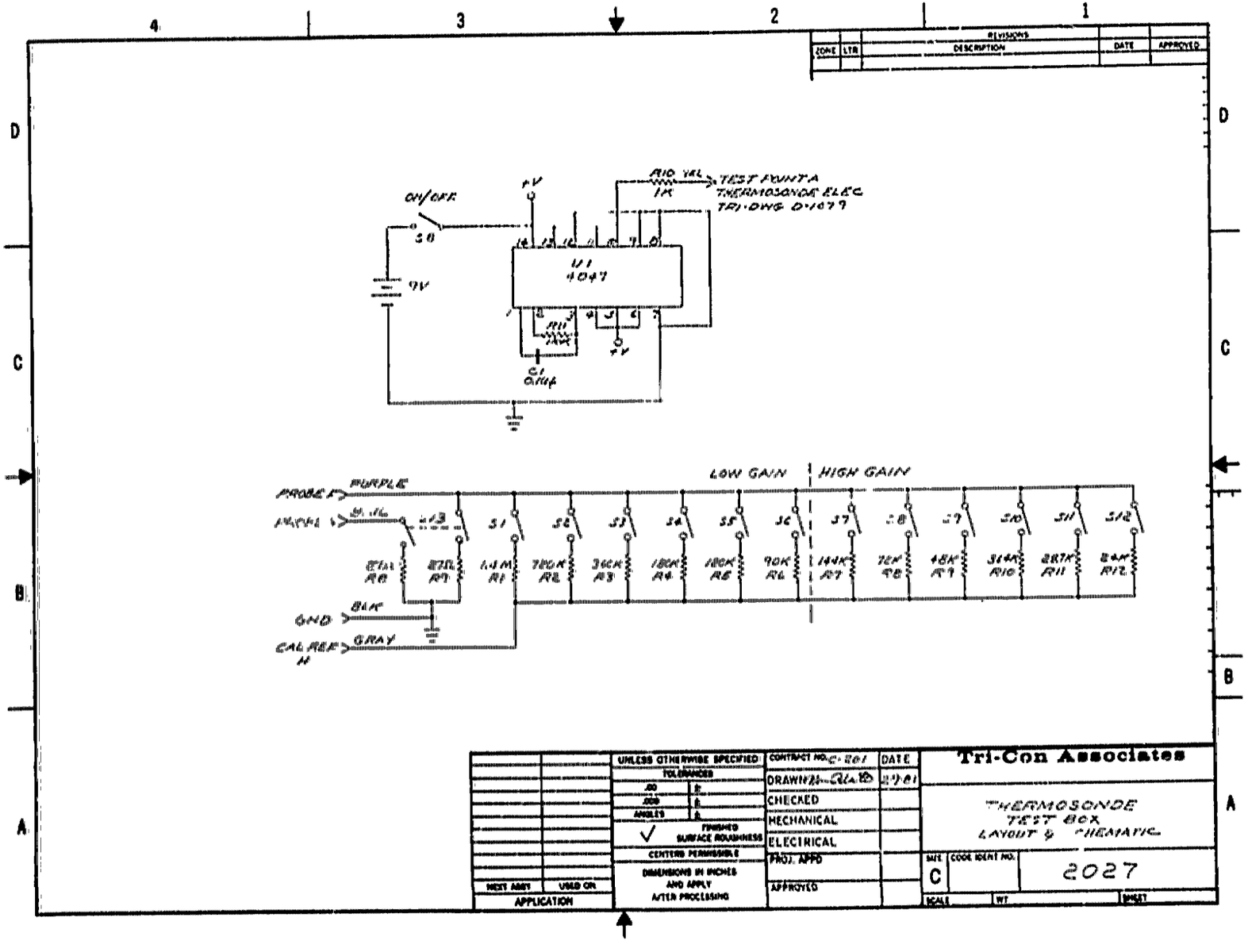

REVISIONS
ZONE
LTR
DESCRIPTION
DATE
APPROVED
ON/OFF
S8
9V
+V
U1
4047
R10 VAL
1K
TEST POINT A
THERMOSONDE ELEC
TRI-DWG D-1079
R11
1K
C1
0.1μf
LOW GAIN
HIGH GAIN
PROBE
PURPLE
GND
BLK
CAL REF
GRAY
S1
S2
S3
S4
S5
S6
S7
S8
S9
S10
S11
S12
R8
R9
R1
R2
R3
R4
R5
R6
R7
R8
R9
R10
R11
R12
UNLESS OTHERWISE SPECIFIED
TOLERANCES
ANGLES
FINISHED SURFACE ROUGHNESS
CENTERS PERMISSIBLE
DIMENSIONS IN INCHES AND APPLY AFTER PROCESSING
NEXT ASSY
USED ON
APPLICATION
CONTRACT NO.
DATE
DRAWN
CHECKED
MECHANICAL
ELECTRICAL
PROJ. APPD
APPROVED
Tri-Con Associates
THERMOSONDE
TEST BOX
LAYOUT & SCHEMATIC
SIZE
C
CODE IDENT NO.
2027
SCALE
WT
SHEET

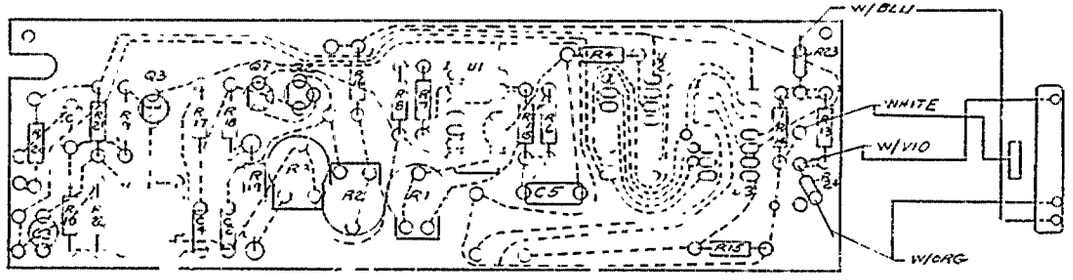

REVISIONS				
ZONE	LTR	DESCRIPTION	DATE	APPROVED

SCHEMATIC SHT 2

NEXT ASSY	USED ON
APPLICATION	

UNLESS OTHERWISE SPECIFIED
TOLERANCES
.00 ±
.000 ±
ANGLES ±
√ FINISHED SURFACE ROUGHNESS
CENTERS PERMISSIBLE
DIMENSIONS IN INCHES AND APPLY AFTER PROCESSING

CONTRACT NO. C-70 DATE
DRAWN [illegible]
CHECKED
MECHANICAL
ELECTRICAL
PROJ APPD
APPROVED

ARTSCIDE PHASE II

SIZE C | CODE IDENT NO. | 2013
SCALE 2/1 | WT | SHEET 1 OF 2

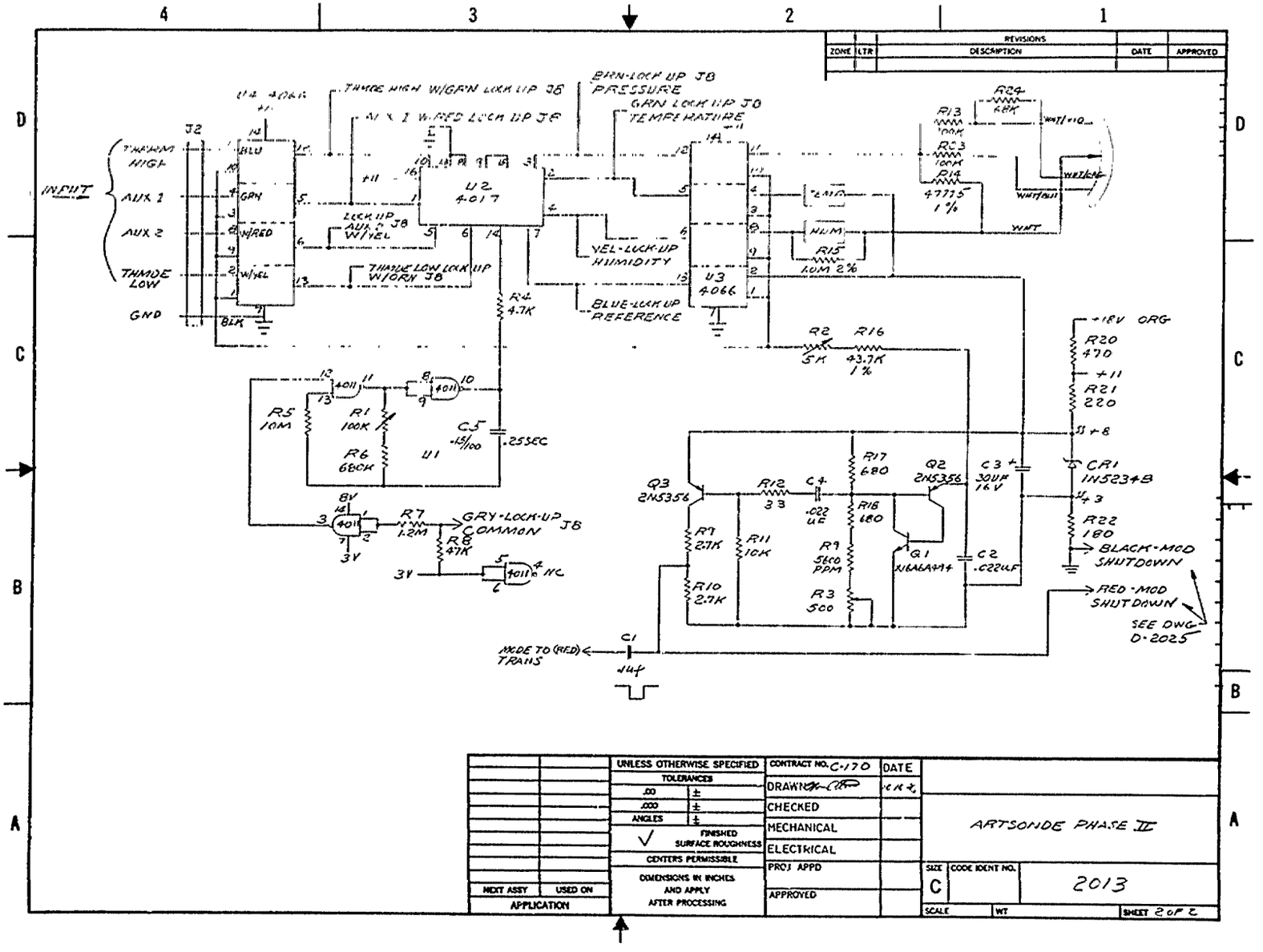
REVISIONS
ZONE | LTR | DESCRIPTION | DATE | APPROVED
INPUT
THMDE HIGH
AUX 1
AUX 2
THMDE LOW
GND
J2
U2 4017
U3 4066
U1 4011
R1 100K
R2 5K
R3 500
R4 4.7K
R5 10M
R6 680K
R7 1.2M
R8 47K
R9 5600 PPM
R10 2.7K
R11 10K
R12 33
R13 100K
R14 47775 1%
R15 1.0M 2%
R16 43.7K 1%
R17 680
R18 680
R20 470
R21 220
R22 180
R24 4BK
C1 .44
C2 .022UF
C3 30UF 16V
C4 .022 UF
C5 .25SEC
Q1 2N4444
Q2 2N5356
Q3 2N5356
CR1 IN5234B
+18V ORG
BLACK-MOD SHUTDOWN
RED-MOD SHUTDOWN
SEE DWG D-2025
MODE TO (RED) TRANS
GRY-LOCK-UP COMMON J8
BARN-LOCK UP J8 PRESSURE
GRN LOCK UP J8 TEMPERATURE
BLUE-LOCK UP REFERENCE
YEL-LOCK-UP HUMIDITY
THMDE HIGH W/GRN LOCK UP J8
AUX 1 W/RED LOCK UP J8
AUX 2 W/YEL
THMDE LOW LOCK UP W/GRN J8
UNLESS OTHERWISE SPECIFIED
TOLERANCES
.00 ±
.000 ±
ANGLES ±
FINISHED SURFACE ROUGHNESS
CENTERS PERMISSIBLE
DIMENSIONS IN INCHES AND APPLY AFTER PROCESSING
NEXT ASSY | USED ON
APPLICATION
CONTRACT NO. C-170
DRAWN
CHECKED
MECHANICAL
ELECTRICAL
PROJ APPD
APPROVED
DATE
ARTSONDE PHASE II
SIZE C
CODE IDENT NO.
2013
SCALE
WT
SHEET 2 OF 2

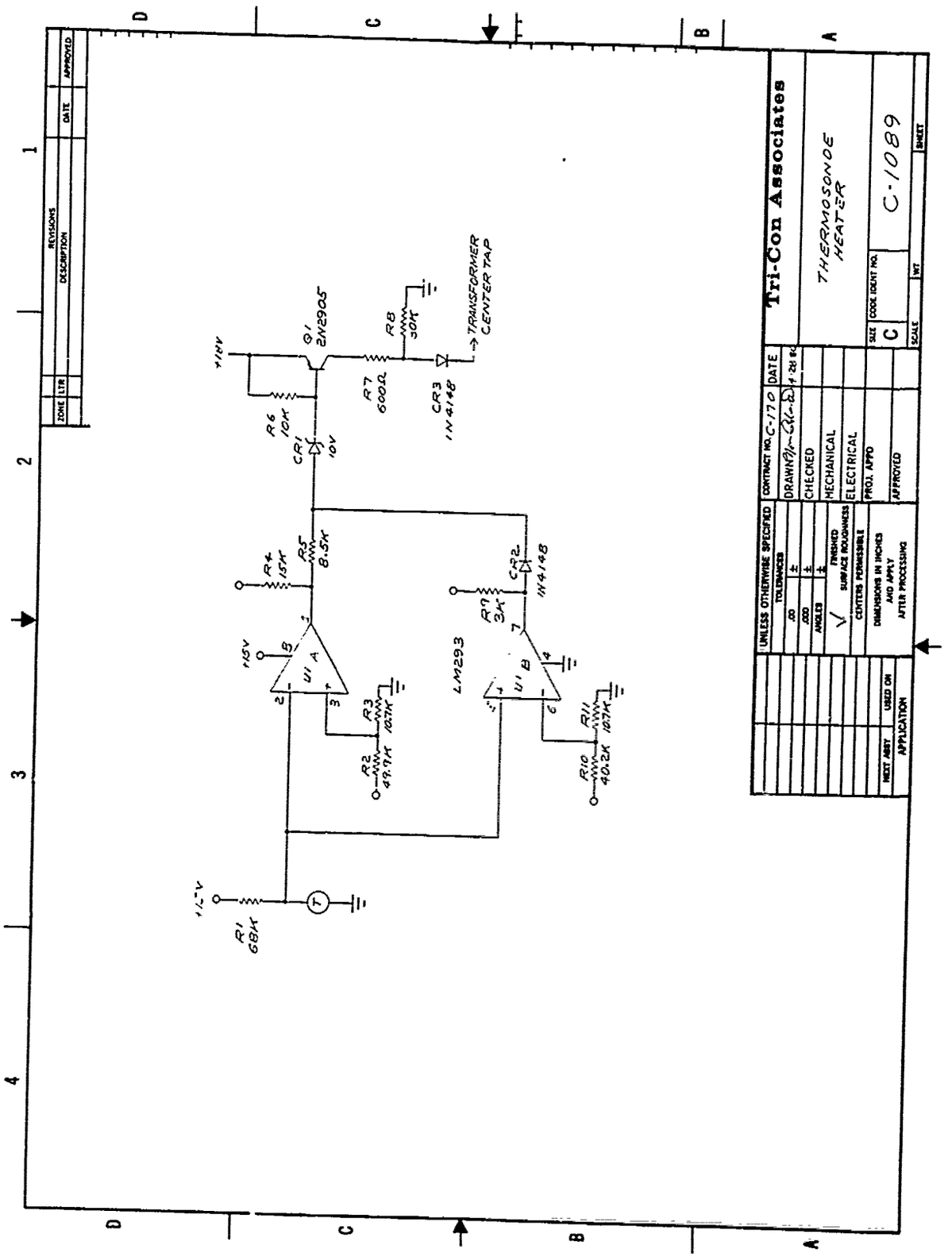
Tri-Con Associates
THERMOSONDE HEATER
C-1089
Q1 2N2905
R8 30K
TRANSFORMER CENTER TAP
R7 600Ω
CR3 1N4148
R6 10K
CR1 10V
R4 15K
R5 8.5K
CR2 1N4148
R7 3K
LM293
U1 A
U1 B
R3 107K
R2 49.9K
R11 107K
R10 40.2K
R1 68K

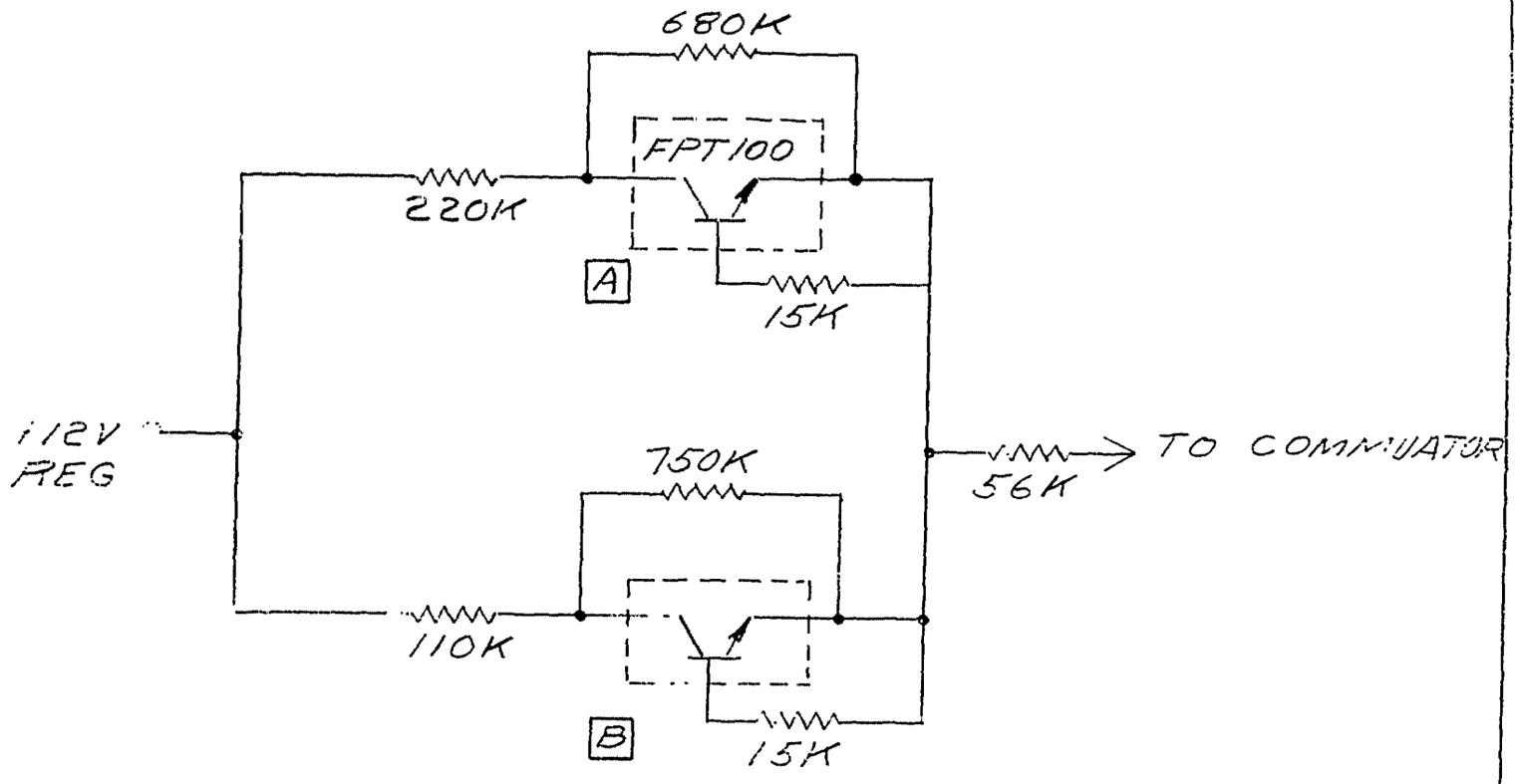

SIZE P.N.O. C-201	TRI-COIL ASSOC SUN SENSOR A 2041

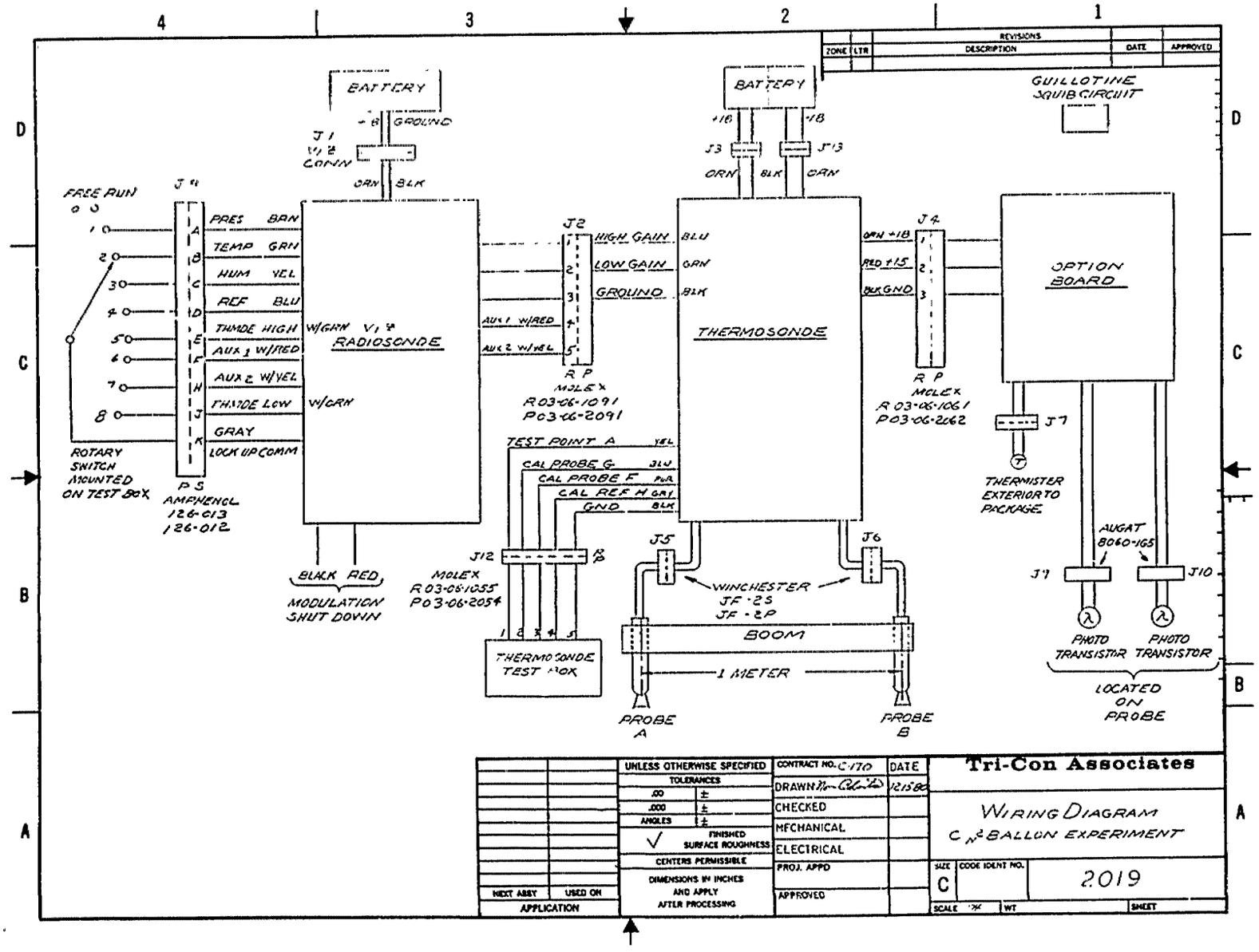
BATTERY
-B GROUND
J1
V/E CONN
ORN BLK
FREE RUN
ROTARY SWITCH MOUNTED ON TEST BOX
J9
PRES BRN
TEMP GRN
HUM YEL
REF BLU
THMDE HIGH W/GRN
AUX 1 W/RED
AUX 2 W/YEL
THMDE LOW W/GRN
GRAY
LOCK UP COMM
RADIOSONDE
P S AMPHENOL 126-013 126-012
BLACK RED
MODULATION SHUT DOWN
J2
HIGH GAIN BLU
LOW GAIN GRN
GROUND BLK
AUX 1 W/RED
AUX 2 W/YEL
R P MOLEX R03-06-1091 P03-06-2091
TEST POINT A YEL
CAL PROBE G BLU
CAL PROBE F PUR
CAL REF H GRY
GND BLK
J12
MOLEX R03-06-1055 P03-06-2054
THERMOSONDE TEST BOX
BATTERY
+18 -18
J3 J13
ORN BLK GRN
THERMOSONDE
J5 J6
WINCHESTER JF-2S JF-2P
BOOM
1 METER
PROBE A
PROBE B
J4
ORN +18
RED +15
BK GND
R P MOLEX A03-06-1061 P03-06-2062
GUILLOTINE SQUIB CIRCUIT
OPTION BOARD
J7
THERMISTER EXTERIOR TO PACKAGE
AUGAT 8060-165
J9 J10
PHOTO TRANSISTOR PHOTO TRANSISTOR
LOCATED ON PROBE
REVISIONS
ZONE LTR DESCRIPTION DATE APPROVED
UNLESS OTHERWISE SPECIFIED
TOLERANCES
.00 ±
.000 ±
ANGLES ±
FINISHED SURFACE ROUGHNESS
CENTERS PERMISSIBLE
DIMENSIONS IN INCHES AND APPLY AFTER PROCESSING
NEXT ASSY USED ON
APPLICATION
CONTRACT NO. C-170
DRAWN
CHECKED
MECHANICAL
ELECTRICAL
PROJ. APPD
APPROVED
DATE 12/15/80
Tri-Con Associates
WIRING DIAGRAM
C N² BALLON EXPERIMENT
SIZE C
CODE IDENT NO.
2019
SCALE
WT
SHEET

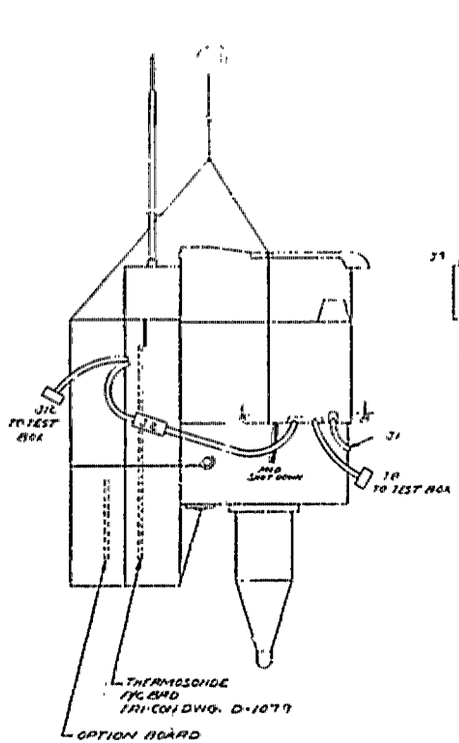

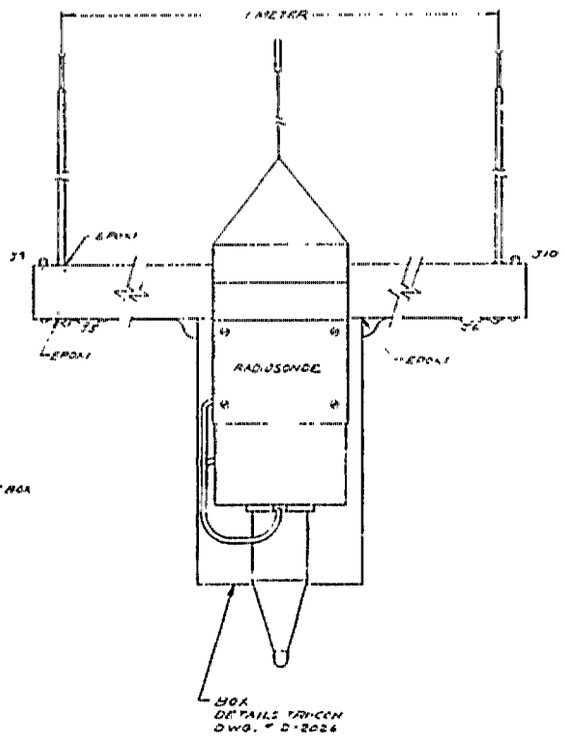

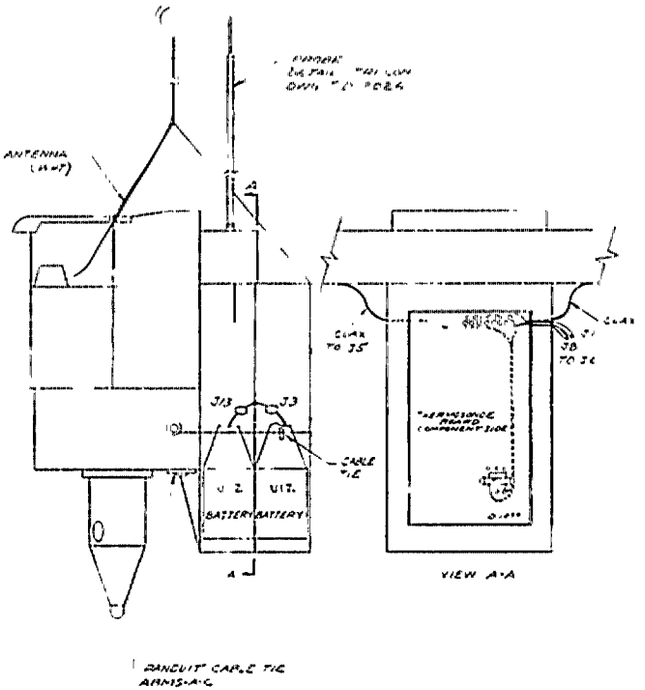

PANDUIT CABLE TIE
ARMS-A-C

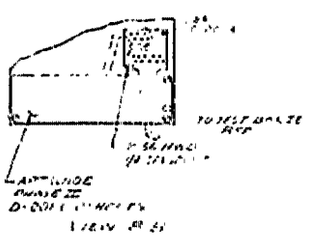

NOTES
1. THERMOSONDE & NEMATIC TM CON DWG D-1078
2. ARTHSONDE PHASE II LAYOUT & SCHEMATIC TRI-CON DWG. C-2013 SHT 1 & 2
3. WIRING DIAGRAM C & BALLOON EXPERIMENT TRI-CON DWG C-2019

ZONE	LTR	REVISIONS DESCRIPTION	DATE	APPROVED

UNLESS OTHERWISE SPECIFIED	
TOLERANCES	
.XX ±	
.XXX ±	
ANGLES ±	
✓ FINISHED SURFACE ROUGHNESS	
CENTERS PERMISSIBLE	
DIMENSIONS IN INCHES AND APPLY AFTER PROCESSING	
NEXT ASSY / USED ON APPLICATION	
CONTRACT NO. C 201	DATE
DRAWN	3 EPI
CHECKED	
MECHANICAL	
ELECTRICAL	
PROJ. APPD	
APPROVED	

Tri-Con Associates

C² BALLOON EXPERIMENT

SIZE	CODE IDENT NO.	2025
D		

SCALE | WT | SHEET

ADDENDUM A

Pre-amp transfer functions from Figure 5:

$$I_{A,B,C,D,} = 2\ E_{A,B,C,D,} \times 10^{-7}$$

$$I_{TT} = 2.1\ E_{TTP} \times 10^{-7} \text{ Amps}$$

E_{TTP} = Pre-amp E_{TT}

$$I_{TT} = .41\ E_{TTCH} \times 10^{-7} \text{ Amps}$$

E_{TTCH} = Commutator Output High Pressure

$$I_{TT} = .94\ E_{TTCL} \times 10^{-7}$$

E_{TTCL} = Commutator Output Low Pressure